Rotary Tiller
TXG, YCT & YCT-R Series

Operator's Manual

Rev. 09/26

Page left blank intentionally

TO THE DEALER:

Assembly and proper installation of this product is the responsibility of the Tar River dealer. Read manual instructions and safety rules. Make sure all items on the Dealer's Pre-Delivery and Delivery Check Lists in the Owner's/Operator's Manual are completed before releasing equipment to the owner.

TO THE OWNER:

Read this manual before operating your Tar River equipment. The information presented will prepare you to do a better and safer job. Keep this manual handy for ready reference. Require all operators to read this manual carefully and become acquainted with all the adjustment and operating procedures before attempting to operate. Replacement manuals can be obtained from your selling dealer. The equipment you have purchased has been carefully engineered and manufactured to provide dependable and satisfactory use. Like all mechanical products, it will require cleaning and upkeep. Lubricate the unit as specified. Observe all safety information in this manual and safety decals on the equipment. For service, your authorized Tar River dealer has trained mechanics, genuine Tar River service parts, and the necessary tools and equipment to handle all your needs. Use only genuine Tar River service parts. Substitute parts will void the warranty and may not meet standards required for safe and satisfactory operation.

Record your implement model and serial number in the space provide below. Your dealer will need this information to give you prompt, efficient service.

Model Number: _____

Serial Number: _____

Date Purchased: _____

TO THE DEALER: Part 1 of 2

Assembly and proper installation of this product is the responsibility of the Belco Resources Dealer. Read manual instructions and safety rules. Make sure all items on the Dealer's Pre-Delivery List and Owners Check List in the Owner's/Operator's Manual are completed before releasing equipment to the owner.

NOTE: The machine must by inspected thoroughly by the dealer prior to delivery of machine to owner. Place a check mark in the box beside each item checked. Contact Belco Recourses Equipment of any damages, issues or shortages to the machine.

Pre-Delivery Checklist - Dealer

- ☐ **Gearbox oil level**
- ☐ **Check all fluids, hydraulic, gear oil, etc.**
- ☐ **Grease fittings properly lubricated**
- ☐ **Guards, shields, attachments securely fastened**
- ☐ **All hardware tightened**
- ☐ **Condition and tension of V-belts (if applicable)**
- ☐ **Blades properly installed, blade hardware tightened to proper torque specifications**
- ☐ **PTO attached to the machine (if applicable)**
- ☐ **All decals are clean, legible and in proper location**
- ☐ **Operator's Manual on machine**

Model #: _____ **Serial #:** _____

Inspected by (Initials): _____ **Date:** _____

TO THE DEALER: Part 2 of 2

Dealer is to review the following items to the owner. Place a check mark in the box beside each item reviewed.

Checklist - Owner

- ☐ **Correct attachment of machine to tractor**
- ☐ **Safe operation of the machine**
- ☐ **Importance of regular lubrication, maintenance and inspection**
- ☐ **Troubleshooting**
- ☐ **Replacing broken or worn parts (importance of using only OEM parts)**
- ☐ **Servicing the machine**
- ☐ **Storage**
- ☐ **Warranty**
- ☐ **Encourage owner to read and understand the Operator's Manual before operating the machine**
- ☐ **Encourage owner to fill out the "Warranty Registration", online warranty@br-equipment.com**

Purchase Date:	_____	**Delivery Date:**	_____
Model #:	_____	**Serial #:**	_____
Dealer Signature	_____	**Date:**	_____
Customer Signature	_____	**Date:**	_____

TO THE OWNER:

Read this manual before operating your Belco Resources equipment. The information presented will prepare you to do a better and safer job. Keep this manual handy for ready reference. Require all operators to read this manual carefully and become acquainted with all the adjustment and operating procedures before attempting to operate. Replacement manuals can be obtained from your selling dealer. The equipment you have purchased has been carefully engineered and manufactured to provide dependable and satisfactory use. Like all mechanical products, it will require cleaning and upkeep. Lubricate the machine as specified. Observe all safety information in this manual and safety decals on the equipment. For service, your authorized Belco Resources dealer has trained mechanics, genuine Belco Resources service parts, and the necessary tools and equipment to handle all your needs. Use only genuine Belco Resources service parts. Substitute parts will void the warranty and may not meet standards required for safe and satisfactory operation.

Table of Contents

Introduction …….. 7

Technical Specifications …….. 7

Safety …… 8

Safety Signal Words ……. 8

General Safety Guidelines …… 9

Safety Decal Care ……. 9

Before Operation …….. 10

During Operation …….. 11

Highway And Transport Operations …… 12-13

PTO Driveline Instructions……... 14-19

Operating Instructions……... 20-21

Maintenance ……...…….. 22-25

Torque Specifications …….. 26

Parts Breakdown …….. 27-61

Warranty ……... 62

Introduction

Thank you for purchasing your Tar River Rotary Tiller. The TXG Series is specifically designed and engineered for compact tractors in the 15-30 horse power range. The YCT & YCT-R Series is specifically designed to tractors in the 30-60 horse power range.

Technical Specifications

- Gear drive transmission, 6 Blades per flange, PTO with slip-clutch protection, Solid A-frame, 6” Tilling depth, Powder coat paint

	TXG-040	TXG-050	TXG-060
Weight Shipping weight	337 lbs. 392 lbs.	374 lbs. 434 lbs.	412 lbs. 477 lbs.
Working width	41”	48”	59”
Blades per flange	6	6	6
HP	15-30	15-30	18-30
PTO driveline	Series 4 S/C	Series 4 S/C	Series 4 S/C

	YCT-050	YCT-060	YCT-066	YCT-074	YCT-082
Weight Shipping weight	525 lbs. 554 lbs.	542 lbs. 608 lbs.	596 lbs. 669 lbs.	640 lbs. 718 lbs.	702 lbs. 757 lbs.
Working width	49”	58”	66”	72”	81”
Blades per flange	6	6	6	6	6
HP	30-50	30-50	35-50	40-50	45-60
PTO driveline	Series 4 S/C	Series 4 S/C	Series 4 S/C	Series 4 S/C	Series 4 S/C

	YCT-R060	YCT-R074
Weight Shipping weight	557 lbs. 623 lbs.	654 lbs. 734 lbs.
Working width	58”	72”
Blades per flange	6	6
HP	30-50	40-50
PTO driveline	Series 4 S/C	Series 4 S/C

Important Safety Information

Safety

It is important that you read the entire manual and to become familiar with this product before you begin using it. This product is designed for certain applications only. The manufacturer cannot be responsible for issues arising from modification. We strongly recommend this product not be modified and /or used for any application other than that for which it is designed. If you have any questions relative to a particular application, DO NOT use the product until you have first contacted us to determine if it can or should be performed on the product.

Read and understand this manual and all safety signs before operating and maintaining . Review the safety instructions and precautions annually.

Safety Signal Words

TAKE NOTE! This safety alert symbol found though out this manual is used to call you attention to instructions involving you personal safety and the safety of others. Failure to follow these instructions can result in injury or death.

This symbol means:
Attention!
Become alert!
Your safety is involved!

Note the use of the signal words, DANGER, WARNING and CAUTION with the safety messages. The appropriate signal word for each has been selected using the following guidelines:

DANGER: Indicates an imminently hazardous situation that, if not avoided, will result in death or serious injury. This signal word is to be limited to the most extreme situations typically for machine components which, for functional purposes, cannot be guarded.

WARNING: Indicates a potentially hazardous situation that, if not avoided, could result in death or serious injury, and includes hazards that are exposed when guards are removed. It may also be used to alert against unsafe practices.

CAUTION: Indicates a potentially hazardous situation that, if not avoided, may result in minor or moderate injury. It may also be used to alert against unsafe practices.

Important Safety Information

General Safety Guidelines

Safety of the operator is one of the main concerns in designing and developing a new piece of equipment. Designers and manufacturers build in as many safety features as possible. However, every year many accidents occur which could have been avoided by a few seconds of thought and a more careful approach to handling equipment. You, the operator, can avoid many accidents by observing the following precautions in this section. To avoid personal injury, study the following precautions and insist those working with you, or for you, follow them.

Replace any DANGER, WARNING, CAUTION or instruction safety decal that is not readable or is missing. Location of such decals are indicated in this manual. Do not attempt to operate this equipment under the influence of drugs or alcohol.

Review the safety instructions with all users annually.

This equipment is dangerous to children and persons unfamiliar with its operation. The operator should be a responsible adult familiar with farm machinery and trained in this equipment's operations. **Do not allow persons to operate or assemble this unit until they have read this manual and have developed a thorough understanding of the safety precautions and of how it works.**

To prevent injury of death, use a tractor equipped with a Roll Over Protection System (ROPS). Do not paint over, remove or deface any signs or warning decals on your equipment. Observe all safety signs and practice the instructions on them.

Never exceed the limits of a piece of machinery. If its ability to do a job, or to do so safely, is in question - **Don't try it!**

Safety Decal Care

- Keep safety signs clean and legible at all times.
- Replace safety signs that are missing or have become illegible.
- Replaced parts that displayed a safety sign should also display the current safety sign
- Safety signs are available from your Distributor or Dealer Parts Department or the factory.

Important Safety Information

How to install Safety Signs:

- Be sure that the installation area is clean and dry.
- Decide on the exact position before you remove the backing paper.
- Remove the smallest portion of the split backing paper.
- Align the decal over the specified area and carefully press the small portion with the exposed sticky backing in place.
- Slowly peel back the remaining paper and carefully smooth the remaining portion of the decal in place.
- Small air pockets can be pierced with a pin and smoothed out using the piece of decal backing paper.

Before Operation

- Carefully study and understand this manual.
- Do not wear loose-fitting clothing, which may catch in moving parts.
- Always wear protective clothing and substantial shoes.
- Assure that all tires are inflated evenly.
- Give the unit a visual inspection for any loose bolts, worn parts or cracked welds, and make necessary repairs. Follow the maintenance safety instructions included with this manual.
- Be sure that there are no tools lying on or in the equipment.
- Do not use the unit until you are sure that the area is clear, especially of children and animals.
- Don’t hurry the learning process or take the unit for granted. Ease into it and become familiar with your new equipment.
- Practice operation of your equipment and its attachments. Completely familiarize yourself and other operators with its operation before using.
- Use a tractor equipped with a Roll Over Protection System (ROPS) and fasten your seat belt prior to starting engine.
- The manufacturer does not recommend usage of tractor with ROPS removed.
- Move tractor wheels to the widest recommended settings to increase stability.
- Securely attach to towing unit. Use a high strength, appropriately sized hitch pin with a mechanical retainer and attach safety chain.
- Do not allow anyone to stand between the tongue or hitch and the towing vehicle when backing up to the equipment.
- Do not use the unit until you are sure that the area is clear, especially of children and animals.

Important Safety Information

During Operation

- Children should not be allowed on the product.
- Clear the area of small children and bystanders before moving the feeder.
- If using a towing unit, securely attach implement by using a hardened 3/4" pin, a metal retainer, and safety chains if required. Shift towing unit to a lower gear before going down steep downgrades, thus using the engine as a retarding force. Keep towing vehicle in gear at all times. Slow down for corners and rough terrain.
- Make sure you are in compliance with all local and state regulations regarding transporting equipment on public roads and highways. Lights and slow moving signs must be clean and visible by overtaking or oncoming traffic when feeder in transported.
- Beware of bystanders, **particularly children!** Always look around to make sure that it is safe to start the engine of the towing vehicle or move the unit. This is particularly important with higher noise levels and quiet cabs, as you may not hear people shouting.
- **NO PASSENGERS ALLOWED!** Do not carry passengers anywhere on, or in, the tractor or equipment, except as required for operation.
- Keep hands and clothing clear of moving parts.
- Do not clean, lubricate or adjust your equipment while it is moving.
- When halting operation, even periodically, set the tractor or towing vehicle brakes, disengage the PTO, shut off the engine and **remove the ignition key.**
- Be especially observant of the operating area and terrain. Watch for holes, rocks or hidden hazards. Always inspect the area prior to operation.
- **DO NOT** operate near the edge of drop-offs or banks.
- **DO NOT** operate on steep slopes as overturns may result.
- Operate up and down (not across) intermediate slopes. Avoid sudden starts and stops.

Important Safety Information

Highway and Transport Operations

- Adopt safe driving practices.
- Keep the brake pedals latched together at all times. **Never use independent braking with machine in tow as loss of control and/or upset of unit can result.**
- Always drive at a safe speed relative to local conditions and ensure that your speed is low enough for an emergency stop to be safe and secure. Keep speed at a minimum.
- Reduce speed prior to turns to avoid the risk of overturning.
- Avoid sudden uphill turns on steep slopes.
- Always keep the tractor or towing vehicle in gear to provide engine braking when going downhill. Do not coast.
- Do not drink and drive!
- Comply with state and local laws governing highway safety and movement of farm machinery on public roads.
- Use approved accessory lighting flags and necessary warning devices to protect operators of other vehicles on the highway during daylight and nighttime transport. Various safety lights and devices are available from your dealer.
- The use of flashing amber lights is acceptable in most localities. However, some localities prohibit their use. Local laws should be checked for all highway and marking requirements.
- When driving the tractor and equipment on the road or highway under 40 kph (20 mph) at night or during the day, use the amber warning lights and a slow moving vehicle (SMV) identification emblem.
- Plan your route to avoid heavy traffic.
- Be a safe and courteous driver. Always yield to oncoming traffic in all situations, including narrow bridges, intersections, etc.
- Be observant of bridge loading ratings. Do not cross bridges rated at lower than the gross weight at which you are operating.
- Watch for obstructions overhead and to the side while transporting.
- Always operate in a position to provide maximum visibility at all times. Make allowances for increased length and weight of the equipment when making turns, stopping the unit, etc.
- Pick the most level route when transporting across fields. Avoid the edges of ditches or gullies and steep hillsides.
- Be extra careful when working in inclines.

Important Safety Information

Highway and Transport Operations

- Maneuver the tractor or towing vehicle at safe speeds.
- Avoid overhead wires or other obstacles. Contact with overhead lines could cause serious injury or death.
- Avoid loose fill, rocks and holes, they can be dangerous for equipment operation or movement.
- Allow for unit length when making turns,
- Operate the towing vehicle from the operator's seat only.
- Never stand alongside of unit with engine running or attempt to start engine and/or operate machine while standing alongside of unit.
- Never leave running equipment attachments unattended.
- As a precaution, always recheck the hardware on equipment following every 100 hours of operation. Correct all problems. Follow the maintenance safety procedures.

PTO Driveline Instructions

Instructions for Installing a PTO Driveline:

1. Begin by parking the tractor and implement on a level, solid surface. Attach the implement to the tractor's hitch arms, upper and lower. Adjust the tractor's 3-point hitch so that the tractor's output shaft is level with the implement's input shaft.
2. Leave the tractor in gear, shut off the tractor engine, remove the key and set the park brake. Block the implement to prevent it from falling over or shifting.
3. Slide the inner yoke of the PTO shaft **'A'** (implement end) onto the input shaft of the implement. Make sure the yoke is securely locked in place.
4. Slide the outer yoke of the PTO shaft **'B'** (tractor end) onto the tractor input shaft. Make sure the yoke is securely locked in place.
5. Because of differences in tractor 3-point arms and implements, it may be necessary to shorten the PTO Driveline. See next page for **"Instructions for Shortening a PTO Driveline"**.
6. Check that the PTO Driveline yokes are securely attached to the tractor and implement before operating. PTO Drivelines not attached properly can cause serious injury or death!
7. If your PTO Driveline shields are equipped with chains, secure the chain to the tractor and or implement to prevent the shield from rotating.
8. Before starting tractor and engaging the PTO Driveline, make certain there are no people or animals between tractor and implement. Rotating PTO Drivelines can cause serious injury or death!

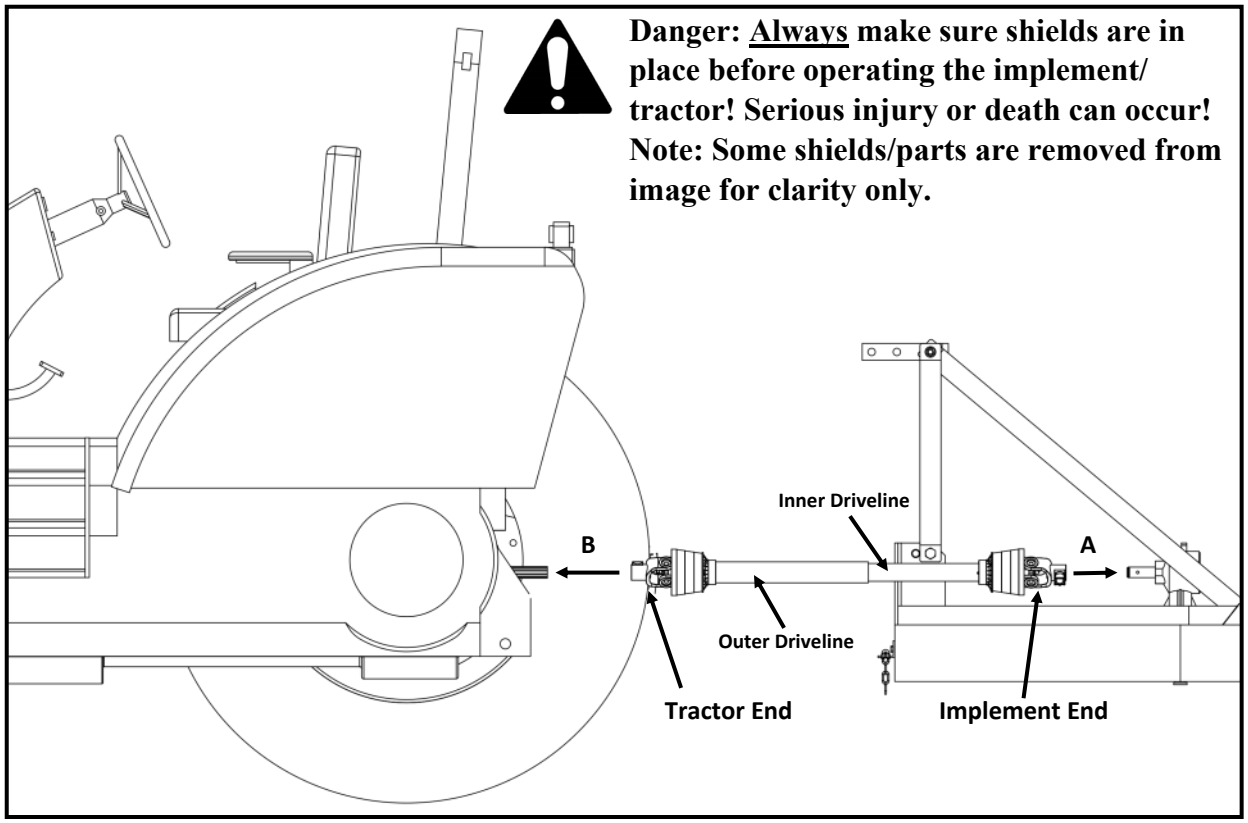

PTO Driveline Instructions

Instructions for Shortening a PTO Driveline:

Note: If you are not confident modifying the PTO Driveline, you should contact a Qualified Professional.

1. Separate the inner and outer PTO Drivelines. Leave separated at this time.
2. Attach the outer PTO Driveline to the tractor implement input shaft and inner PTO driveline to the implement input shaft.
3. With the drivelines parallel to one another, measure 1" (dim. **'B'**) back from the outer PTO Driveline shield (see fig. 2) and make a mark on the inner PTO Driveline.
4. Measure 1" (dim **'B'**) back from the inner PTO Driveline shield (see fig. 2) and make a mark on the outer PTO Driveline.
5. Remove the drivelines from the tractor and implement.
6. Measure from the end of the inner shield to the scribed mark (dim. **"C"**). Cut the inner shield at that mark. Cut the same amount off the inner shaft (dim. **"C1"**).
7. Measure from the end of the outer shield to the scribed mark (dim. **"D"**). Cut the outer shield at that mark. Cut the same amount off the inner shaft (dim. **"D1"**).
8. Clean off all burrs from both drivelines.
9. Refer to **"Checking PTO Driveline Extended Length"** section next.

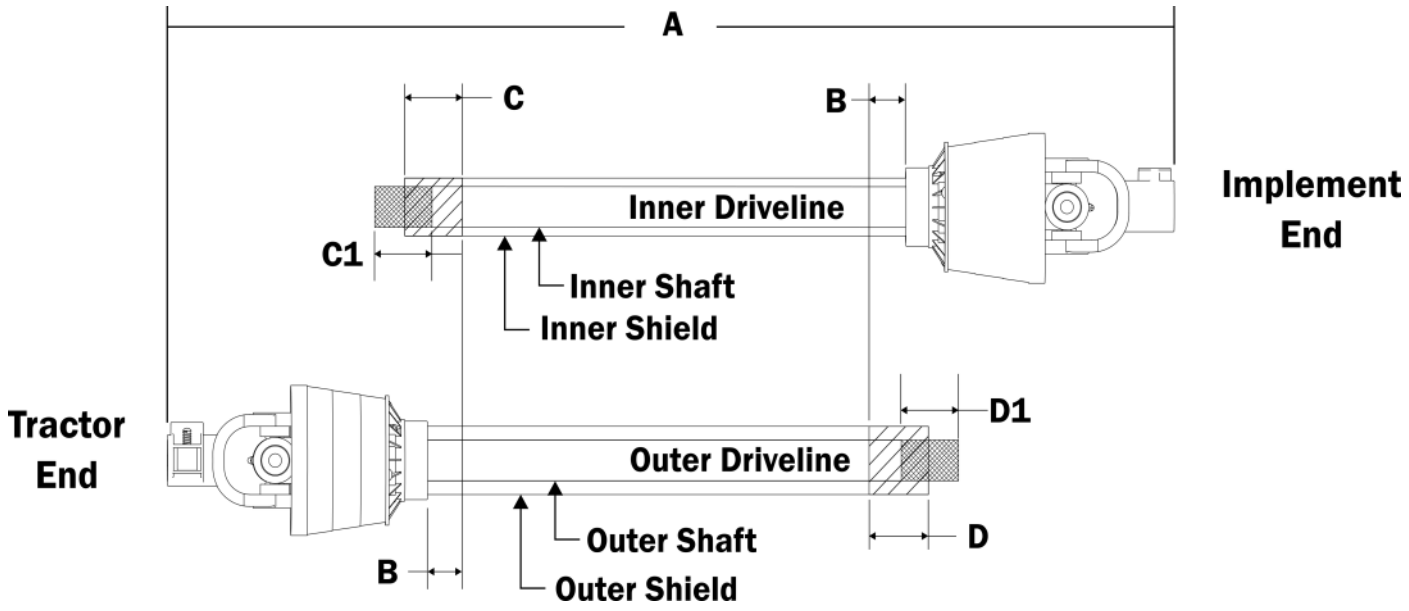

PTO Driveline Instructions

Checking PTO Driveline Extended Length:

1. Apply multi-purpose grease to the outside of the inner driveline section. Assemble the outer and inner drivelines.
2. When fully extended, the maximum allowable length must have a minimum overlap of 1/3 the free length of the inner and outer sections. Measure and record the maximum extended length for future reference.
3. Attach the outer PTO Driveline to the tractor implement input shaft and inner PTO driveline to the implement input shaft.
4. Pull both yoke ends to make sure they are properly seated on the input shafts. **Warning:** If the drive lines are not properly seated, they can separate from the tractor or implement, causing extensive damage and possibly serious injury or death.
5. Raise and lower the implement to determine the maximum extended length. Make sure the maximum extended length does not exceed the maximum length determined from step 2.

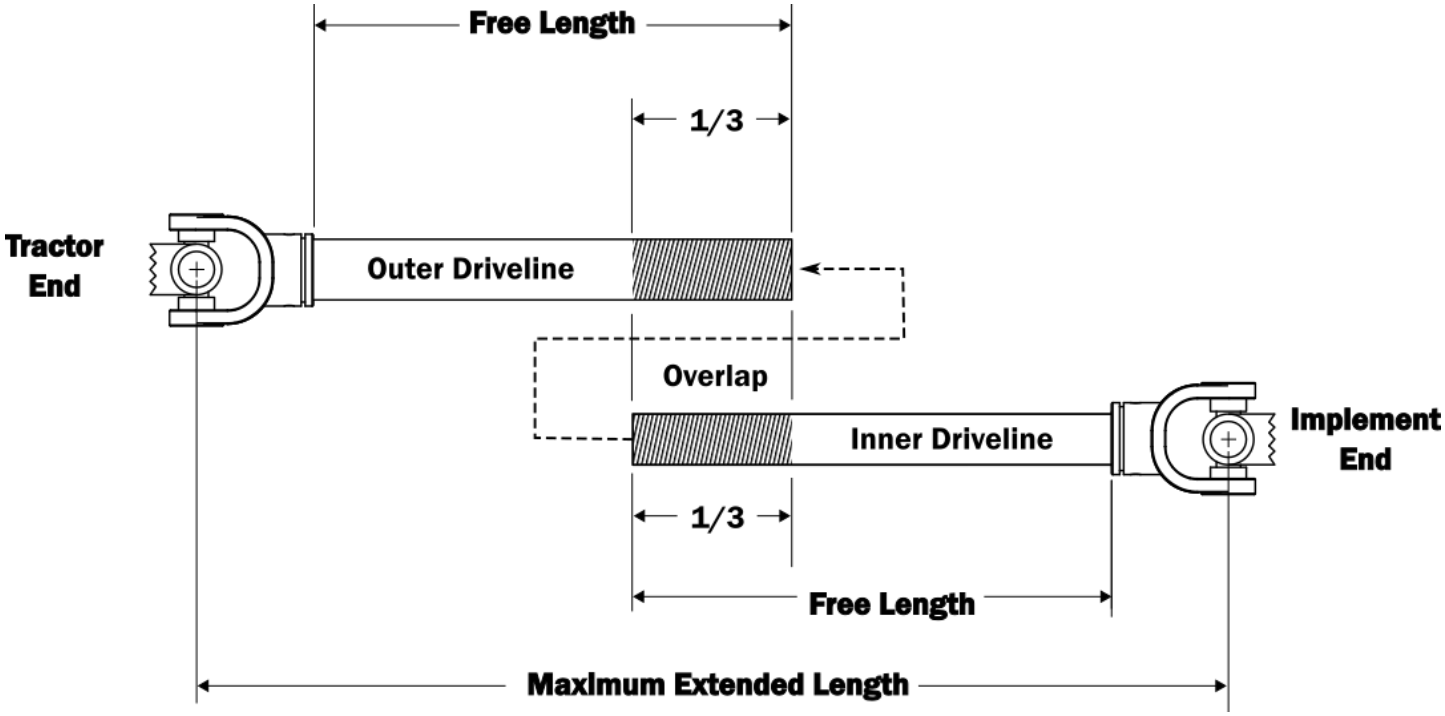

Danger: <u>Always</u> make sure shields are in place before operating the implement/tractor! Serious injury or death can occur!
Note: Some shields/parts are removed from image for clarity

PTO Driveline Instructions

Checking for PTO Driveline Interference:

1. Begin with the PTO Driveline level (0 degrees). Raise the implement at an angle no greater than 25 degrees from level. Check for any interference and the length of the PTO Driveline extended. Do not exceed the maximum extended length!
2. Next lower the PTO Driveline at an angle no greater than 25 degrees from level. Check for any interference and the length of the PTO Driveline extended. Do not exceed the maximum extended length!

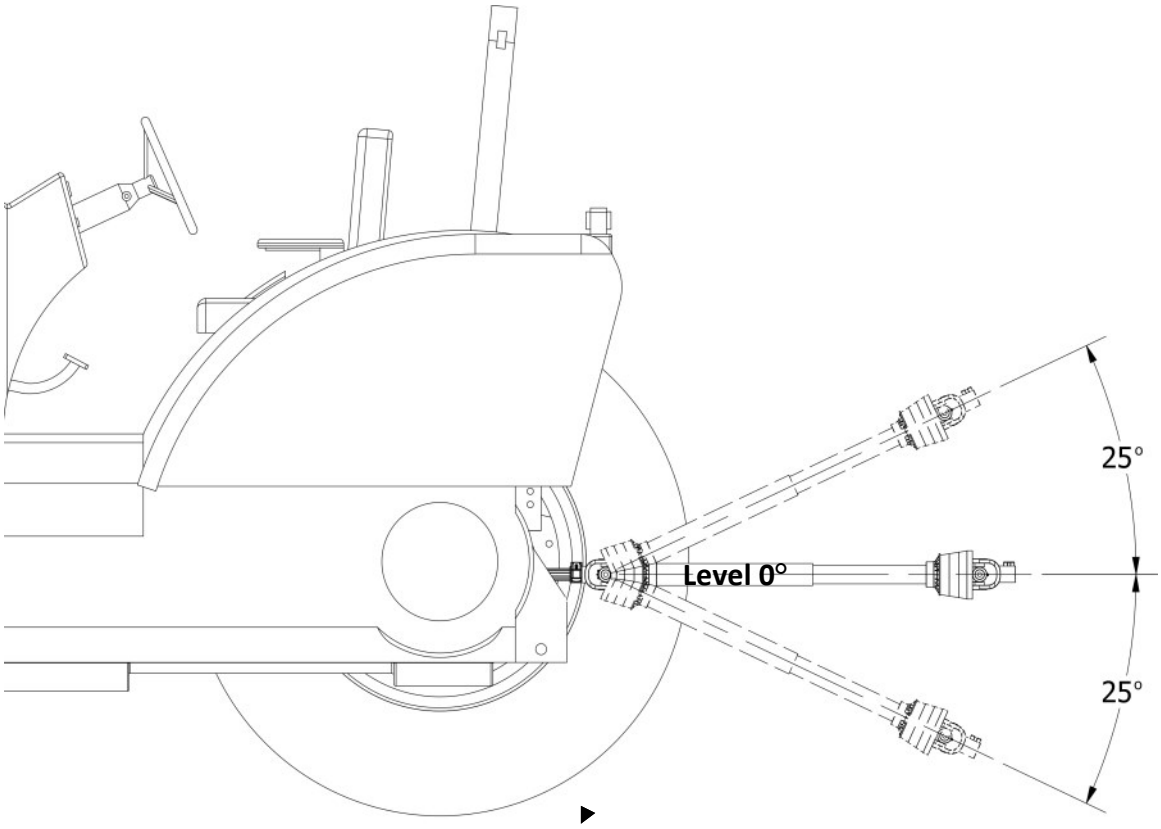

Danger: <u>Always</u> make sure shields are in place before operating the implement/tractor! Serious injury or death can occur!
Note: Some shields/parts are removed from image for clarity

Scan the QR code below for more detailed information on PTO installation.

PTO Driveline Instructions

Caution: Slip Clutches may become hot. Do Not Touch! Keep the slip clutch area clear of material that may catch fire.

NOTE: Adjustments are relative to soil conditions, strength of the springs, thickness of the friction discs, etc. Slip clutches have adjustable torque settings. The torque setting varies with the different compression of each spring. All the springs should have an equal amount of compression.

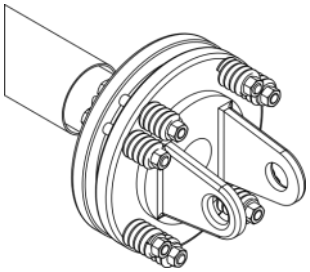

Adjustments for Slip clutch equipped PTO Drivelines:

The slip clutch must be adjusted before first use or after a storage period.

1. Install tiller on the tractor that will be used.
2. Using a marker, scribe a line across the exposed edges of the clutch plate and friction discs.
3. Back off compression nuts to free friction discs by turning each nut ***exactly*** 2 revolutions.
4. Start the tractor and run the driveline at a low idle to slip the friction discs. This will remove the dirt, corrosion and surface floss from the clutch plate faces.
5. Disengage PTO, shut down tractor and wait for all components to come to a complete stop.
6. Inspect the clutch and ensure that the scribed markings on the disc and plates have changed position. If any two marks are still aligned, this is an indication that these discs have not slipped. It may be necessary to completely disassemble the clutch to free them up.
7. After ensuring all discs are free, tighten the compression nuts, uniformly, 1-1/2 turns.
8. Remark the white lines and repeat process until the lines no longer move. Run tiller for approximately 5 to 10 feet.
9. When the disc no longer slip, this is the optimal setting. Make only small adjustments. Important: Do not over-tighten the compression nuts as this may impair performance or cause premature wearing of the slip clutch.

PTO Driveline Instructions

Refer to Fig. 5

Every 8 hours:

Grease the PTO shaft and apply a light layer of grease on the inner tube.

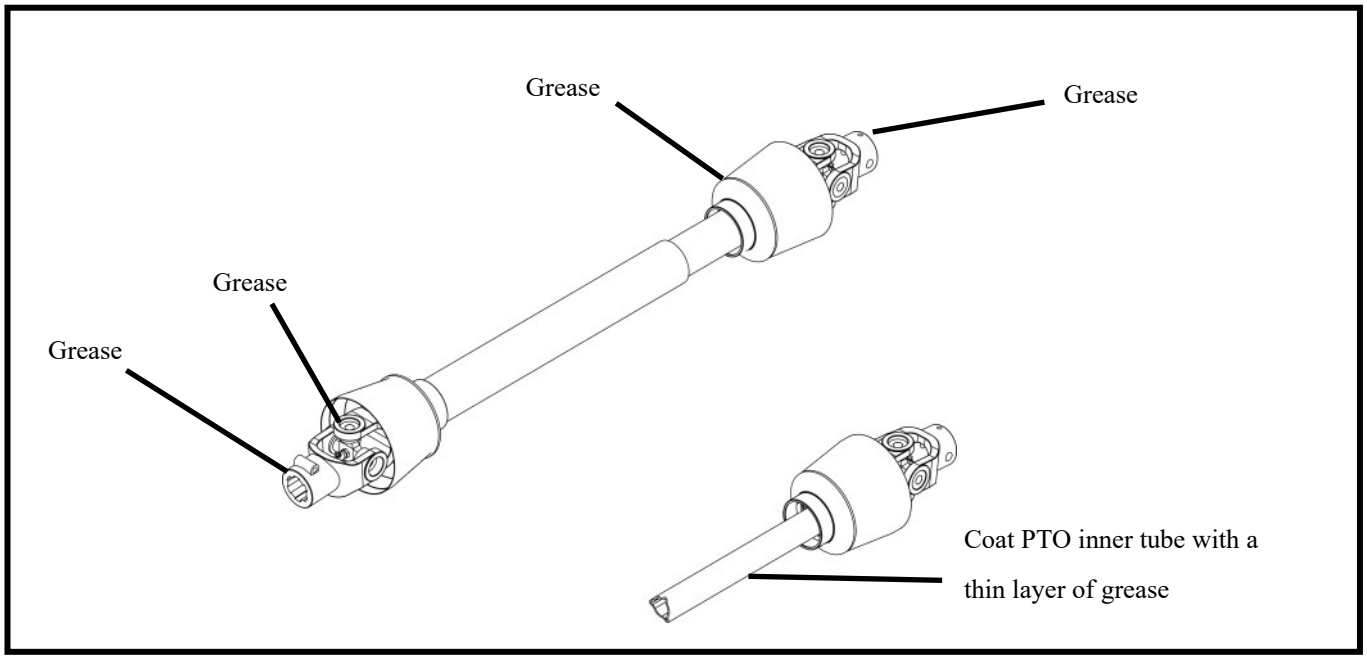

Fig. 5

Operating Instructions

Working Depth Adjustment

The working depth is controlled by raising or lowering the side skids. If the skids are raised, the working depth increases. By lowering the skids, the tilling depth with decrease.

Tailgate adjustment Version 1

The tailgate can be adjusted to help smooth and compact the tilled ground. Release the chain and secure to the desired height.

Version 1

Tailgate adjustment Version 2

Down pressure is adjusted by position of the “R-clip”. The lower position (see image below) applies more pressure resulting in greater soil compaction. Less soil compaction is achieved by placing the “R-clip” in the higher hole on shaft.

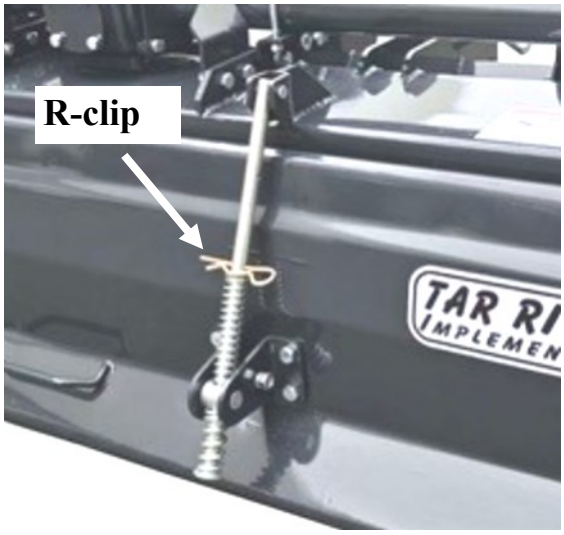

Version 2

Operating Instructions

Start up

After making the necessary adjustments, lower the rotary tiller until the blades are a couple of inches from the ground. Engage the PTO and slowly lower the tiller to begin working.

Removal and Storage

1. After finishing, remove the rotary tiller from the tractor.
2. Put the PTO driveline in a safe location so it will not become damaged.
3. Clean and dry the equipment.
4. Replace any damaged or worn parts.
5. Check all bolts and nuts for tightness.
6. Lubricate and protect the machine from the elements.

Following Operation

- Following operation, or when unhitching, stop the tractor or towing vehicle, set the brakes, disengage the PTO and all power drives, shut off the engine and **remove the ignition keys**.
- Store the unit in an area away from human activity.
- Do not park equipment where it will be exposed to livestock for long periods of time. Damage and livestock injury could result.
- Do not permit children to play on or around the stored unit.
- Make sure all parked machines are on a hard, level surface and engage all safety devices.
- Wheel chocks may be needed to prevent unit from rolling.

Maintenance

Performing Maintenance

- Good maintenance is your responsibility. Poor maintenance is an invitation to trouble.
- Make sure there is plenty of ventilation. Never operate the engine of the towing vehicle in a closedbuilding. The exhaust fumes may cause asphyxiation.
- Be certain all moving parts on attachments have come to a complete stop before attempting to performmaintenance.
- Always use the proper tools or equipment for the job at hand.
- Use extreme caution when making adjustments.
- Never replace hex bolts with less than grade five bolts unless otherwise specified.
- After servicing, be sure all tools, parts and service equipment are removed.
- Where replacement parts are necessary for periodic maintenance and servicing, genuine factory replacement parts must be used to restore your equipment to original specifications. The manufacturer will not claim responsibility for use of unapproved parts and/or accessories and other damages as a result of their use.
- If equipment has been altered in any way from original design, the manufacturer does not accept anyliability for injury or warranty.

Maintenance Schedule

8 hours	Grease the Rotor support **(GP grease)**
	Grease PTO shaft cross & bearings **(GP grease)**
	Check Hardware for tightness
16 hours	Check oil level in center gearbox **(SAE 90W)**
	Check oil level in side gearbox **(EP 00 Multi-purpose Grease)**
	Check Hardware for tightness
200 hours	Replace oil in center gearbox **(SAE 90W)**
	Replace oil in side gearbox **(EP 00 Multi-purpose Grease)**
	Change chain tensioner spring **(DLT model only)**
	Check Hardware for tightness

Replacing Blades

In order for the tiller to perform optimally, make sure the tiller blades are in good working conditionand their bolts and nuts tight. Always replace the blades with the bolt head against the blade and thewasher and nut on the flange side to help prevent the blades from loosening.

Maintenance

Lubrication

Fluid Capacities - Gearboxes

Model	Location	Type	Capacity
TXG	Center Gearbox	SAE 90W	16 oz.
TXG	Side Gearbox	EP 00 Multi-purpose Grease	18 oz.
YCT	Center Gearbox	SAE 90W	30 oz.
YCT	Side Gearbox	EP 00 Multi-purpose Grease	24 oz.

Side Gearbox:

- Run the tiller long enough to warm the oil.
- Level the tiller, shut off tractor and set the park brake. Remove the "Lower Plug". The warmed lubricant should reach the bottom of the "Lower Plug" hole as shown.
- If the lubricant level is below the bottom of the "Lower Plug" hole, add oil through the "Fill Plug" hole or "Lower Plug" hole. Add (EP 00 Multi-purpose Grease) to bring the level to the normal operating range.
- Replace and tighten all plugs before operating the tiller.

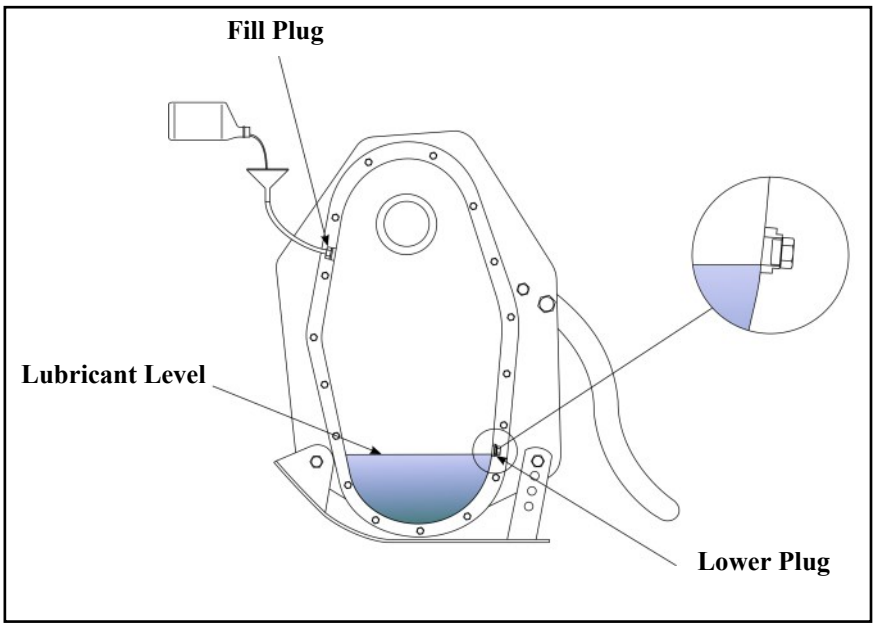

Note: Check after 16 hours of use.

Center Gear Box:

- Unscrew and remove the dipstick and wipe clean.
- Screw in dipstick and hand tighten only.
- Once again, remove the dipstick and check the oil level. If the oil level is on or below the low level mark, add enough oil (SAE 90W) to the gearbox to bring the oil level up to normal operating range between the low mark and high mark.
- Screw in dipstick before operating the tiller.
- Do not overfill.

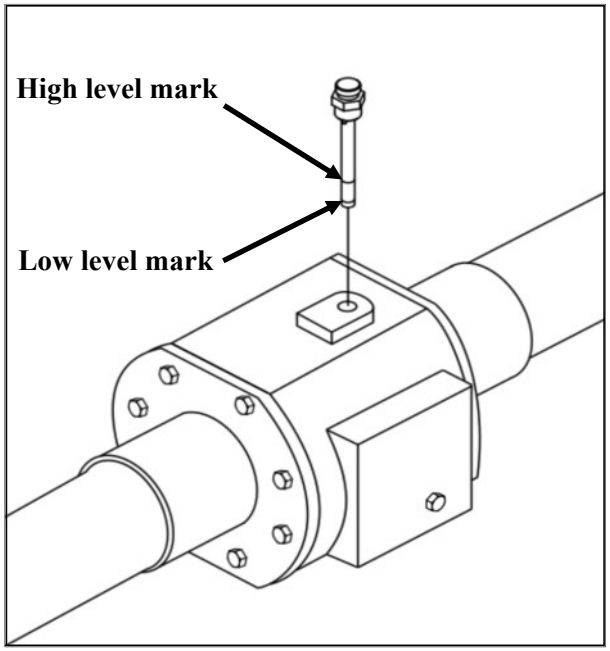

Note: Check after 16 hours of use.

Maintenance

Lubrication

Gearbox Input Shaft:

- When attaching and reattaching the PTO driveline, be sure to lubricate all surfaces of the gearbox input shaft with Multi-Purpose Grease.

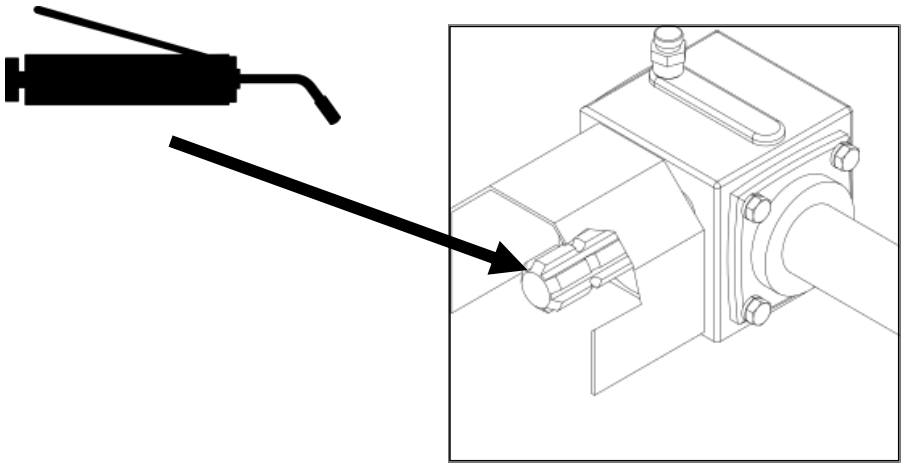

PTO Driveline:

- Grease the PTO Driveline U-joints with Multi-Purpose Grease every 8 hours of use.
- Slide apart the two PTO Driveline halves from each other. Clean and coat (every 20 hours of use) the inner tube of the PTO Driveline shaft with a thin layer of Multi-Purpose Grease and reassemble.

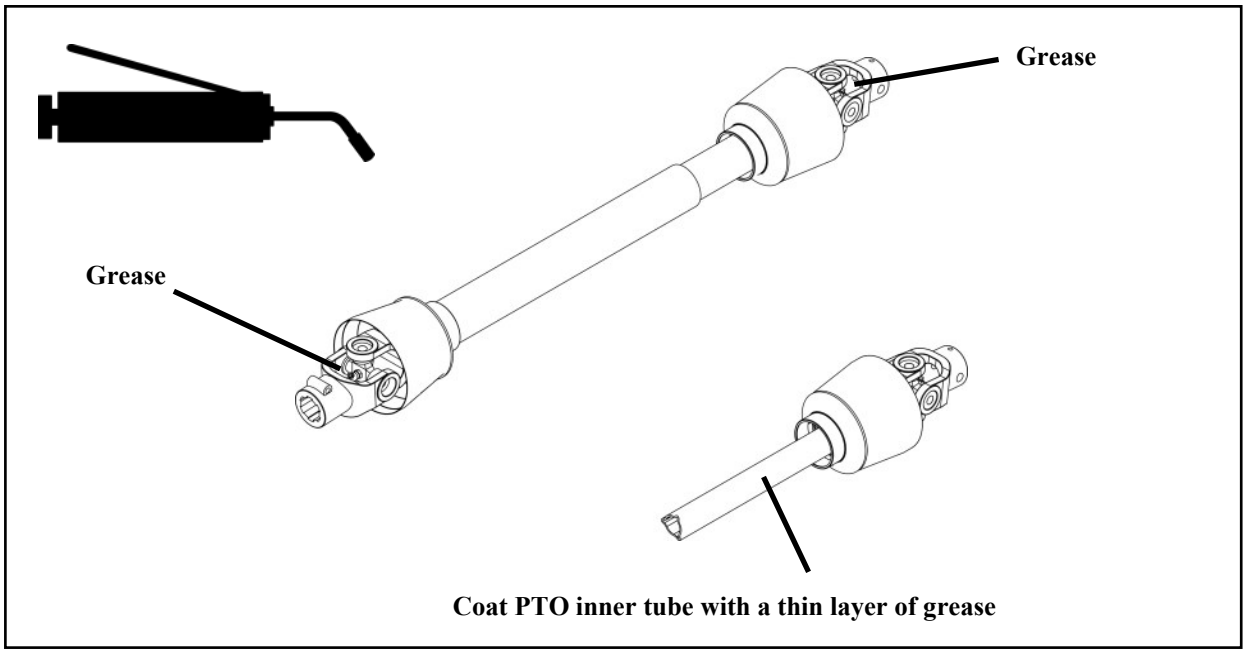

Maintenance

Lubrication

Rotor Support:

Lubricate the grease fitting on the RH end of the Rotor Shaft, with Multi-Purpose Grease every 8 hours of use.

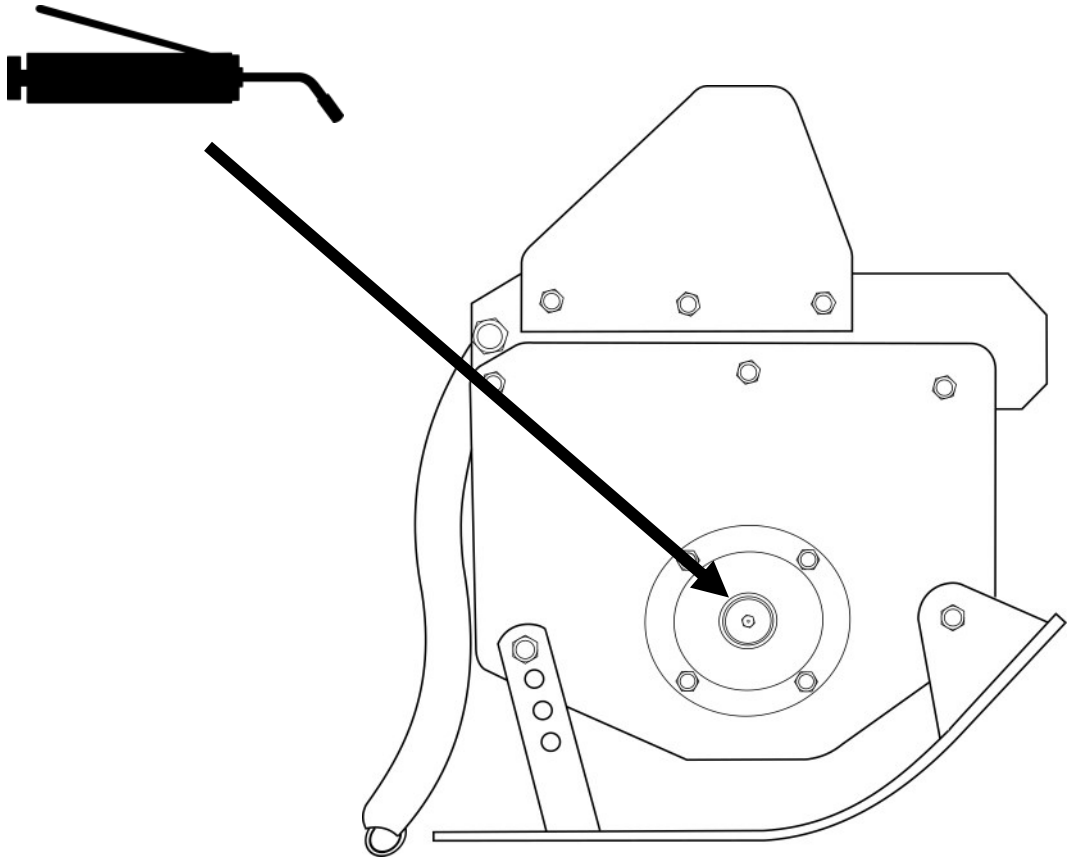

Torque Specifications

Torque Specifications for Common Bolt Sizes

Inches

Bolt size (inches)	Thread pitch	Grade 2 N.m	Grade 2 ft-lb	Grade 5 N.m	Grade 5 ft-lb	Grade 8 N.m	Grade 8 ft-lb
1/4"	20	7	5	11	8	16	12
1/4"	28	8	6	13	10	19	14
5/16"	18	15	11	24	17	33	25
5/16"	24	17	13	26	19	37	27
3/8"	16	27	20	42	31	59	44
3/8"	24	31	23	47	35	67	49
7/16"	14	43	32	67	49	95	70
7/16"	20	48	36	75	55	106	78
1/2"	13	66	48	102	75	144	106
1/2"	20	75	55	115	85	163	120
9/16"	12	95	70	147	109	208	154
9/16"	18	106	79	164	121	232	171
5/8"	11	132	97	203	150	287	212
5/8"	18	149	110	230	170	325	240
3/4"	10	233	172	361	266	509	376
3/4"	16	261	192	403	297	569	420
7/8"	9	226	167	582	430	822	606
7/8"	14	249	184	642	473	906	668
1"	8	339	250	873	644	1232	909
1"	12	371	273	955	704	1348	995
1-1/8"	7	480	354	1077	794	1746	1288
1-1/8"	12	539	397	1208	891	1958	1445
1-1/4"	7	677	500	1519	1120	2463	1817
1-1/4"	12	750	553	1682	1241	2728	2012
1-3/8"	6	888	655	1992	1469	3230	2382
1-3/8"	12	1011	746	2268	1673	3677	2712
1-1/2"	6	1179	869	2643	1949	4286	3161
1-1/2"	12	1326	978	2974	2194	4823	3557

Metric

Bolt size (metric)	Thread pitch	Class 5.8 N.m	Class 5.8 ft-lb	Class 8.8 N.m	Class 8.8 ft-lb	Class 10.9 N.m	Class 10.9 ft-lb
M5	0.08	4	3	6	4	9	7
M6	1	6	4	10	7	15	11
M8	1.25	16	12	25	18	36	27
M8	1	17	13	26	19	38	28
M10	1.5	31	23	48	35	71	52
M10	1.25	33	24	51	38	75	55
M10	1	35	26	53	39	78	58
M12	1.75	54	40	84	62	123	91
M12	1.5	56	41	87	64	128	94
M12	1.25	59	44	90	66	133	98
M14	2	84	62	133	98	195	144
M14	1.5	94	69	142	105	209	154
M16	2	131	97	206	152	302	223
M16	1.5	141	104	218	161	320	236
M18	2.5	181	133	295	218	421	310
M18	2	196	145	311	229	443	327
M18	1.5	203	150	327	241	465	343
M20	2.5	256	189	415	306	592	437
M20	1.5	288	212	454	335	646	476
M22	2.5	344	254	567	418	807	595
M22	1.5	381	281	613	452	873	644
M24	3	444	327	714	526	1017	750
M24	2	488	360	769	567	1095	808
M27	3	656	484	1050	774	1496	1103
M27	2	719	530	1119	825	1594	1176
M30	3.5	906	668	1420	1047	2033	1499
M30	2	1000	738	1600	1180	2250	1659
M36	4	1534	1131	2482	1830	3535	2607

Notes:

This chart is an approximate estimate of torque values.

Always tighten hardware to these values unless a different torque value or tightening procedure is listed for a specific application.

Fasteners must always be replaced with the same grade as specified in the manual.

Always use the proper tool for tightening hardware: SAE for SAE hardware and Metric for Metric hardware.

Make sure that fastener threads are clean and that you properly start thread engagement.

Rotary Tiller
TXG, YCT & YCT-R Series

Parts Manual

Rev. 09/26

TXG Series Rotary Tiller - Version 1

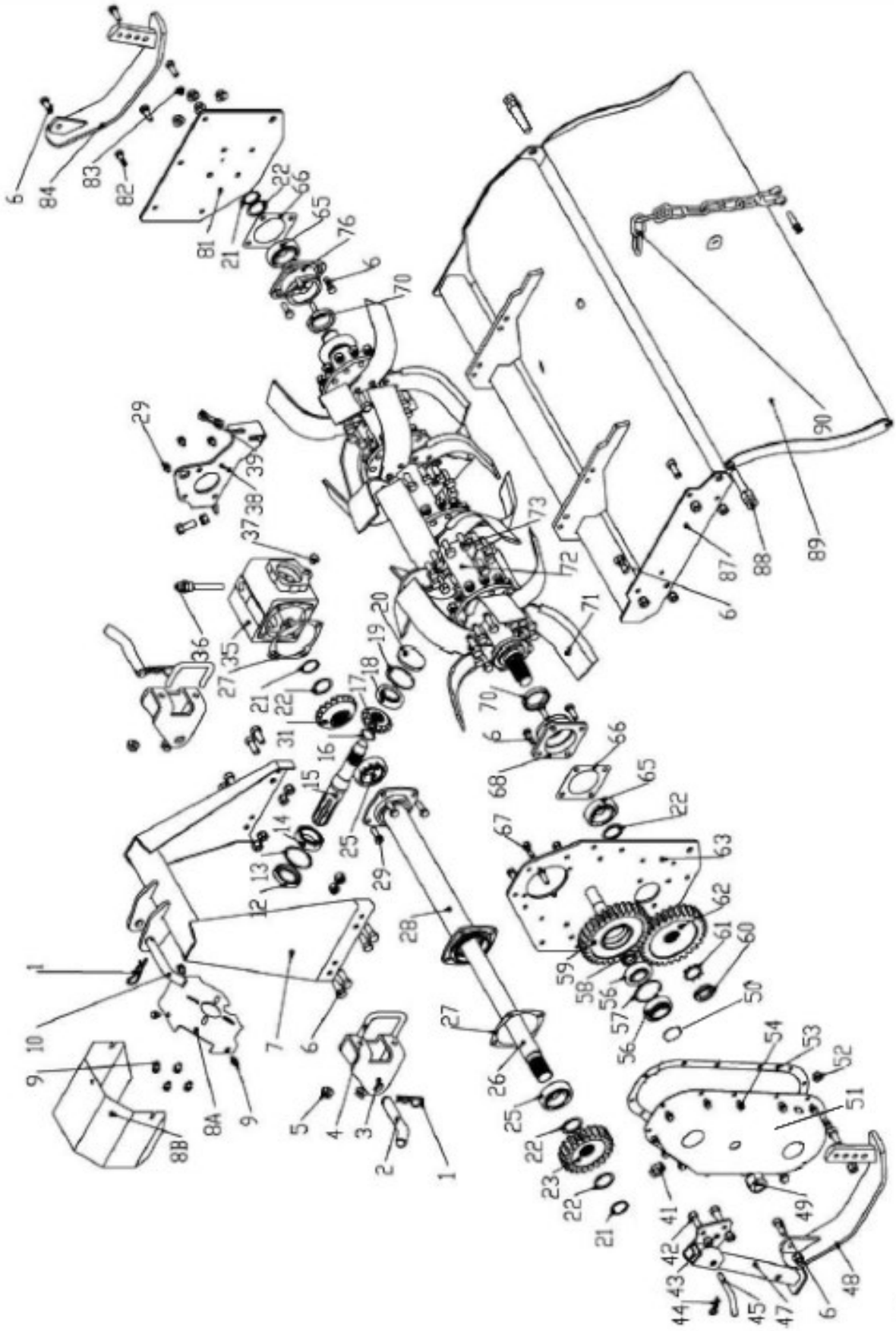

TXG Series Rotary Tiller - Version 1

Item	Part #	Description	Qty.
1	RC4	"R" Clip M4	2
2	YT1066010204	Hitch Pin	2
3	TX0202	Lower Hitch Bracket	2
4	TX0203	"U" Bolt, Lower Hitch Bracket	2
5	NM12175	Hex Nut– M12 x 1.75	4
6	BM101530	Bolt- M10 x 1.5 x 30	8
	NM1015	Nut M10-1.5	8
	LW10	Lock washer M10	8
7	TX0101	A Frame	1
8A	TX030402	Support—Gearbox Shield	1
8B	TX030401	Gearbox Shield	1
8C	TX03011	Complete TXG Gearbox shield	1
9	BM0812516	Bolt- M8 x 1.25 x 16	4
10	YT1066010202	Top Hitch Pin	1
12	OS356210	Oil Seal- M35 x 62 x 10	1
13	SRI-62	Snap Ring– Internal M62	1
14	B6007	Bearing 6007	1
15	TX0307	Input Shaft	1
16	SRE-30	Snap Ring- External M30	1
17	TX0303	Pinion Gear Z-13	1
18	B30305	Bearing 30305	2
19	SRI-62	Snap Ring- Internal M62	1
20	TX0309	Gearbox Cap (M62 Diameter)	1
21	SRE-34	Snap Ring- External M34	1
22	TX0402	Shim– M2	1
23C	TX0507	Gear Drive	1
25	B62072RS	Bearing- 6207-2RS	1
26	TX0304-40	Drive Shaft TXG-040	1
	TX0304-50	Drive Shaft TXG-050	1
	TX0304-60	Drive Shaft TXG-060	1
27	TX0306	Gasket - Drive shaft– M112 x 96 x 0.5	1
28	TX0301-40	Drive Shaft Tube Housing TXG-040	1
	TX0301-50	Drive Shaft Tube Housing TXG-050	1
	TX0301-60	Drive Shaft Tube Housing TXG-060	1
29	BM101525	Bolt– M10 x 1.5 x 25	4
31	TX0304	Ring Gear Z19	1
35	TX0302	Housing - Gearbox	1
36	YT1066020300	Gearbox Oil Plug Dipstick	1
37	OP1415	Oil Plug– M14 x 1.5	1

TXG Series Rotary Tiller - Version 1

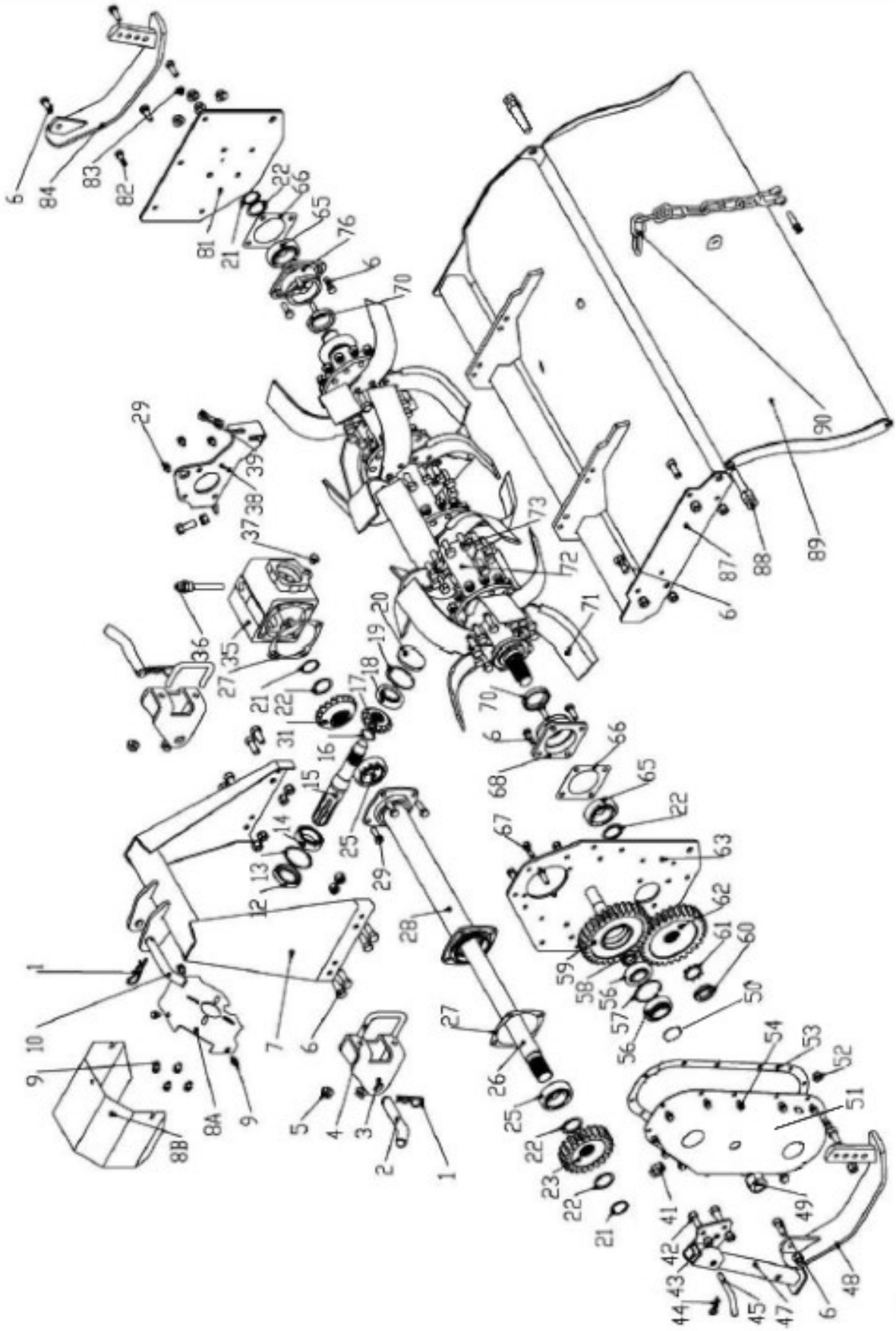

TXG Series Rotary Tiller - Version 1

Item	Part #	Description	Qty.
38	TX0310	Lifting Hook	1
41	OP1615V	Oil plug Vented - M16-1.5	1
42	BM101525	Bolt– M10 x 1.5 x 25	2
43	YT1066050200	Stand Bracket	1
44	RC3	R-Clip– M3	1
45	YT10660501	Pin - Stand	1
47	YT1066050100	Stand Leg	1
48	TX0601	Skid Weldment - Left	1
49	LNM2415	Nut– M24 x 1.5	1
50	OR25x3	O Ring- M25 x 3	1
51	TX0501	Side Gear Cover	1
52	OP12125	Oil Plug– M12 x 1.25	1
53	TX0500	Gasket - Side Gear/Chain Case	1
54	BM0812520	Bolt- M8 x 1.25 x 20	13
56	B30305	Bearing 30305	1
57	SRI-62	Snap Ring- Internal M62	1
58	TX0511	Spacer	1
59	TX0508	Idler Gear	1
60	SNM3015	Spanner Nut- Rotor M30 x 1.5	1
61	SLW30	Star Washer- Rotor M30	1
62	TX0509	Gear- Bottom	1
63	TX0305	Side Panel - Left	1
65	B6207	Bearing 6207	1
66	TX0406	Gasket - Rotor M102 x 73 x 0.5	1
67	BM101525	Bolt- M10 x 1.5 x 25	4
68	TX0403	Bearing Support	1
70	OS356210	Oil Seal - M35 x 62 x 10	1
71	TX0404	Blade - Left	12/15/18
	TX0405	Blade - Right	12/15/18
72	TX0401-40	Rotor - TX40	1
	TX0401-50	Rotor - TX50	1
	TX0401-60	Rotor - TX60	1
73	BM1212535	Bolt- M12 x 1.25 x 35 Fine Thread	8
	NM12125	Nut- M12 x 1.25 Fine Thread	8
	LW12	Lock Washer - M12	8

TXG Series Rotary Tiller - Version 1

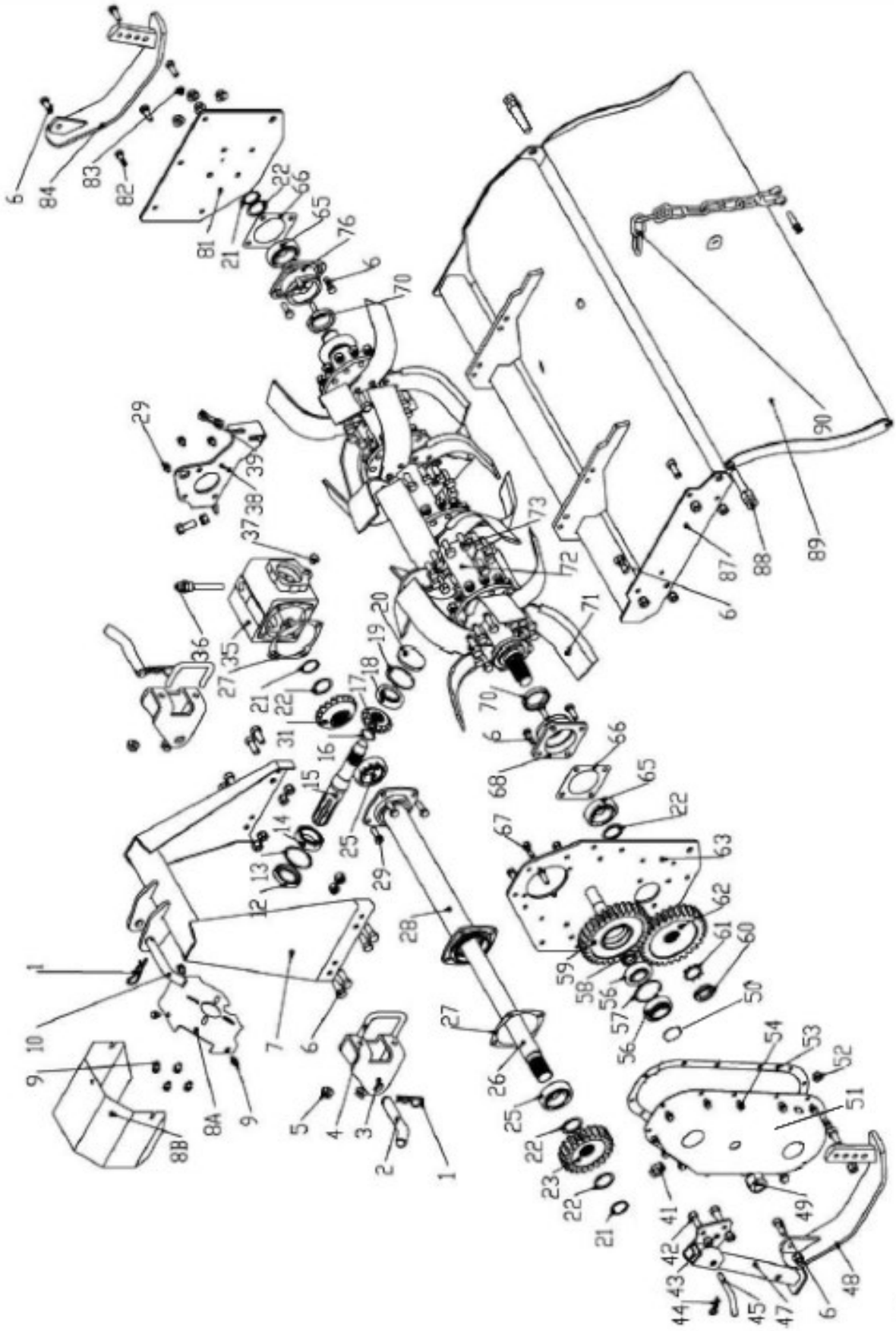

TXG Series Rotary Tiller - Version 1

Item	Part #	Description	Qty.
76	TX0403	Bearing Support	1
81	TX0201	Side Panel - Right	1
82	BM101525	Bolt– M10 x 1.5 x 25	3
83	GN061S	Grease Nipple– Straight M6 x 1.0	1
84	TX0602	Skid Weldment - Right	1
87	TX02-40	Frame Weldment TXG-040	1
	TX02-50	Frame Weldment TXG-050	1
	TX02-60	Frame Weldment TXG-060	1
88	BM162090FT	Bolt HH M16-2.0x90 full thread	2
	NM162	Nut- M16 x 2.0	2
89	TX07-40	Tailgate TXG-040	1
	TX07-50	Tailgate TXG-050	1
	TX07-60	Tailgate TXG-060	1
90	TX01	Tailgate Chain assembly	1
	TXGBC1001	Gearbox Complete (NOT SHOWN)	1

TXG Series Rotary Tiller - Version 2 (See Note Pg 39)

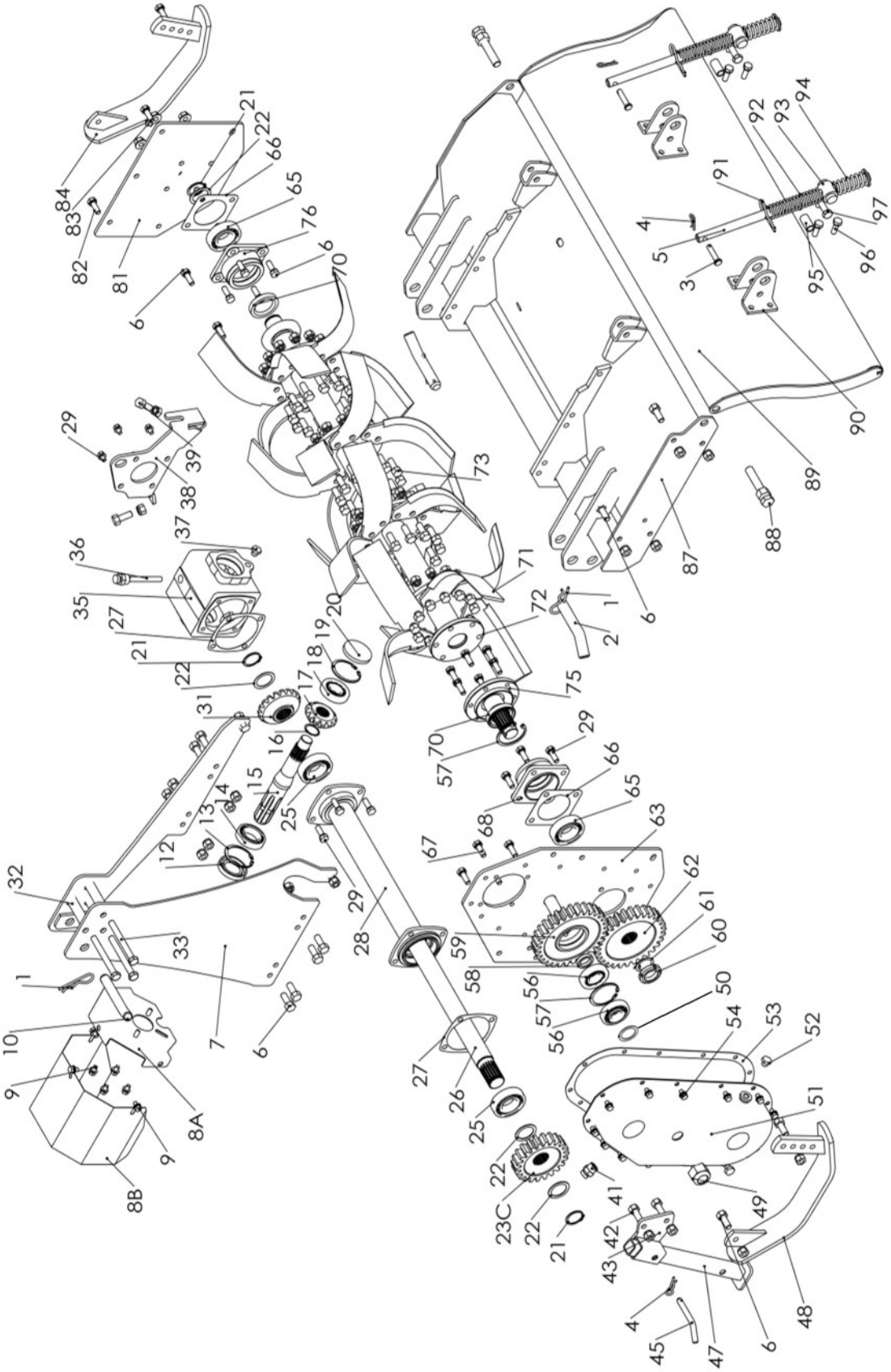

TXG Series Rotary Tiller - Version 2

Item	Part #	Description	Qty.
1	RC4	"R" clip M4	3
2	YT1066010204	Hitch pin	2
3	CP1045	Clevis pin M10x45	2
4	RC3	"R" clip M3	2
5	YT1066070700	Rod - tailgate spring	4
6	BM101530	Bolt HH M10-1.5x30	20
7	TX0101A	A Frame, TXG version 2	1
8A	TX030402	Support—Gearbox Shield	1
8B	TX030401	Gearbox Shield	1
9	BM0812516	Bolt- M8 x 1.25 x 16	7
10	YT1066010204	Hitch Pin	1
12	OS356210	Oil Seal- M35 x 62 x 10	1
13	SRI-62	Snap Ring– Internal M62	1
14	B6007	Bearing 6007	1
15	TX0307	Input Shaft	1
16	SRE-30	Snap Ring- External M30	1
17	TX0303	Pinion Gear Z-13	1
18	B30305	Bearing 30305	1
19	SRI-62	Snap Ring- Internal M62	1
20	TX0309	Gearbox Cap (M62 Diameter)	1
21	SRE-34	Snap Ring- External M34	3
22	TX0402	Shim– M2	4
23C	TX0507	Gear Drive	1
25	B62072RS	Bearing- 6207-2RS	2
26	TX0304-40	Drive Shaft TXG-040	1
26	TX0304-50	Drive Shaft TXG-050	1
26	TX0304-60	Drive Shaft TXG-060	1
27	TX0306	Gasket - Drive shaft– M112 x 96 x 0.5	2
28	TX0301-40	Drive Shaft Tube Housing TXG-040	1
28	TX0301-50	Drive Shaft Tube Housing TXG-050	1
28	TX0301-60	Drive Shaft Tube Housing TXG-060	1
29	BM101525	Bolt– M10 x 1.5 x 25	8
31	TX0304	Ring Gear Z19	1
32	YT01030103	A frame spacer	3
33	BM12175110	Bolt HH M12-1.75x110	3
35	TX0302	Housing - Gearbox	1

TXG Series Rotary Tiller - Version 2

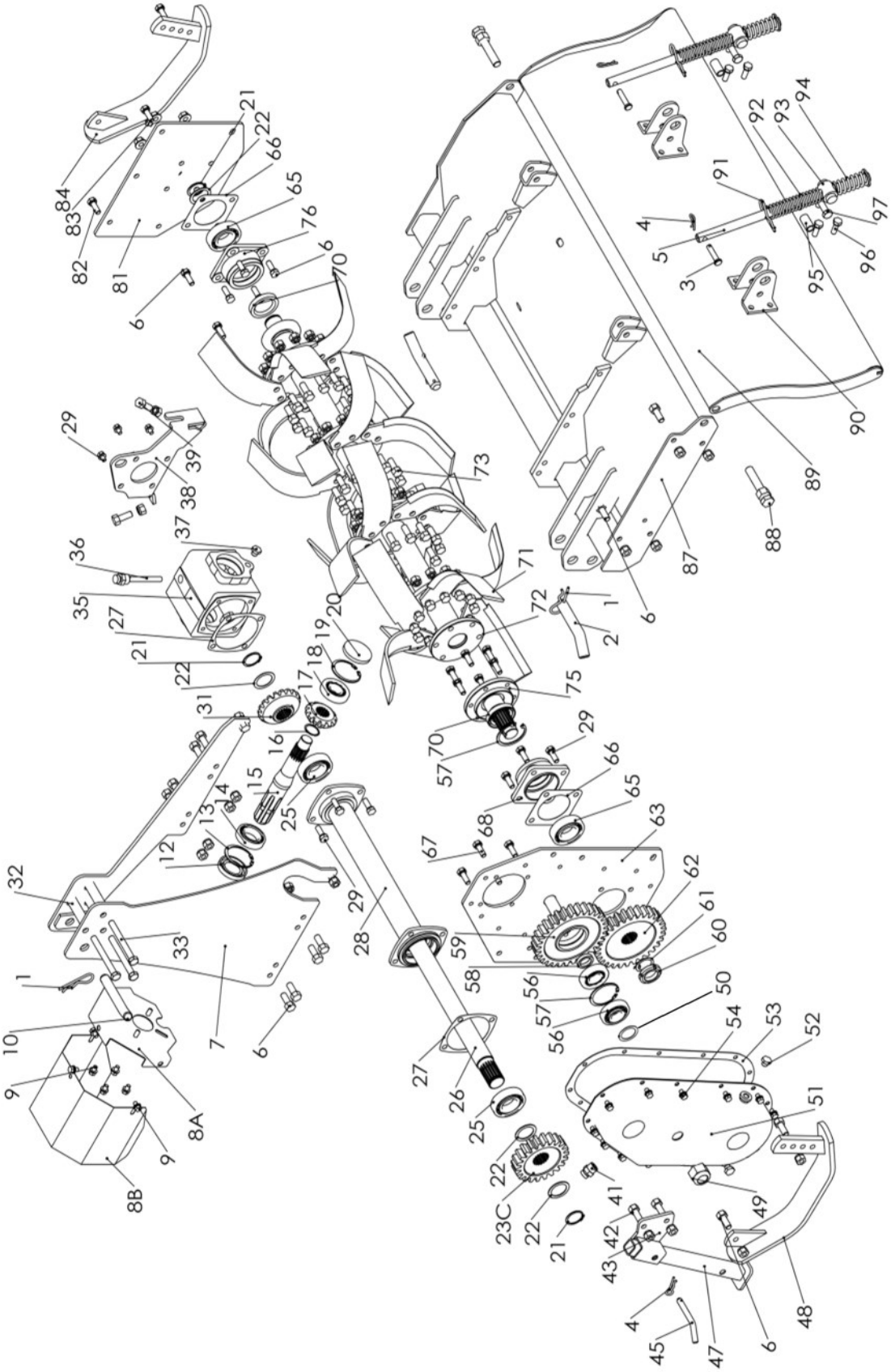

TXG Series Rotary Tiller - Version 2

Item	Part #	Description	Qty.
36	YT10660203000	Gearbox Oil Plug Dipstick	1
37	OP1415	Oil Plug– M14 x 1.5	1
38	TX0310	Lifting Hook	1
39	BM1212530	Bolt HH M12-1.50x30	2
41	OP1615V	Oil plug Vented - M16-1.5	1
42	BM101525	Bolt– M10 x 1.5 x 25	2
43	YT1066050200	Stand Bracket	1
45	YT10660501	Pin - Stand	1
47	YT1066050100	Stand Leg	1
48	TX0601	Skid Weldment - Left	1
49	LNM2415	Nut– M24 x 1.5	1
50	OR25x3	O Ring- M25 x 3	1
51	TX0501	Side Gear Cover	1
52	OP12125	Oil Plug– M12 x 1.25	1
53	TX0500	Gasket - Side Gear/Chain Case	1
54	BM0812520	Bolt- M8 x 1.25 x 20	13
56	B30305	Bearing 30305	2
57	SRI-62	Snap Ring- Internal M62	1
58	TX0511	Spacer	1
59	TX0508	Idler Gear	1
60	SNM3015	Spanner Nut- Rotor M30 x 1.5	1
61	SLW30	Star Washer- Rotor M30	1
62	TX0509	Gear- Bottom	1
63	TX0305	Side Panel - Left	1
65	B6207	Bearing 6207	2
66	TX0406	Gasket - Rotor M102 x 73 x 0.5	2
67	BM101525	Bolt- M10 x 1.5 x 25	4
68	TX0403	Bearing Support	1
70	OS406210	Oil Seal - M40 x 62 x 10	2
71	TX0404	Blade - Left	24
72	TX0401-40	Rotor - TX40	1
72	TX0401-50	Rotor - TX50	1
72	TX0401-60	Rotor - TX60	1
73	BM1212535	Bolt- M12 x 1.25 x 35 Fine Thread	24
75	TX0402A	Rotar shaft support TXG	1
76	TX0403	Bearing Support	1

TXG Series Rotary Tiller - Version 2

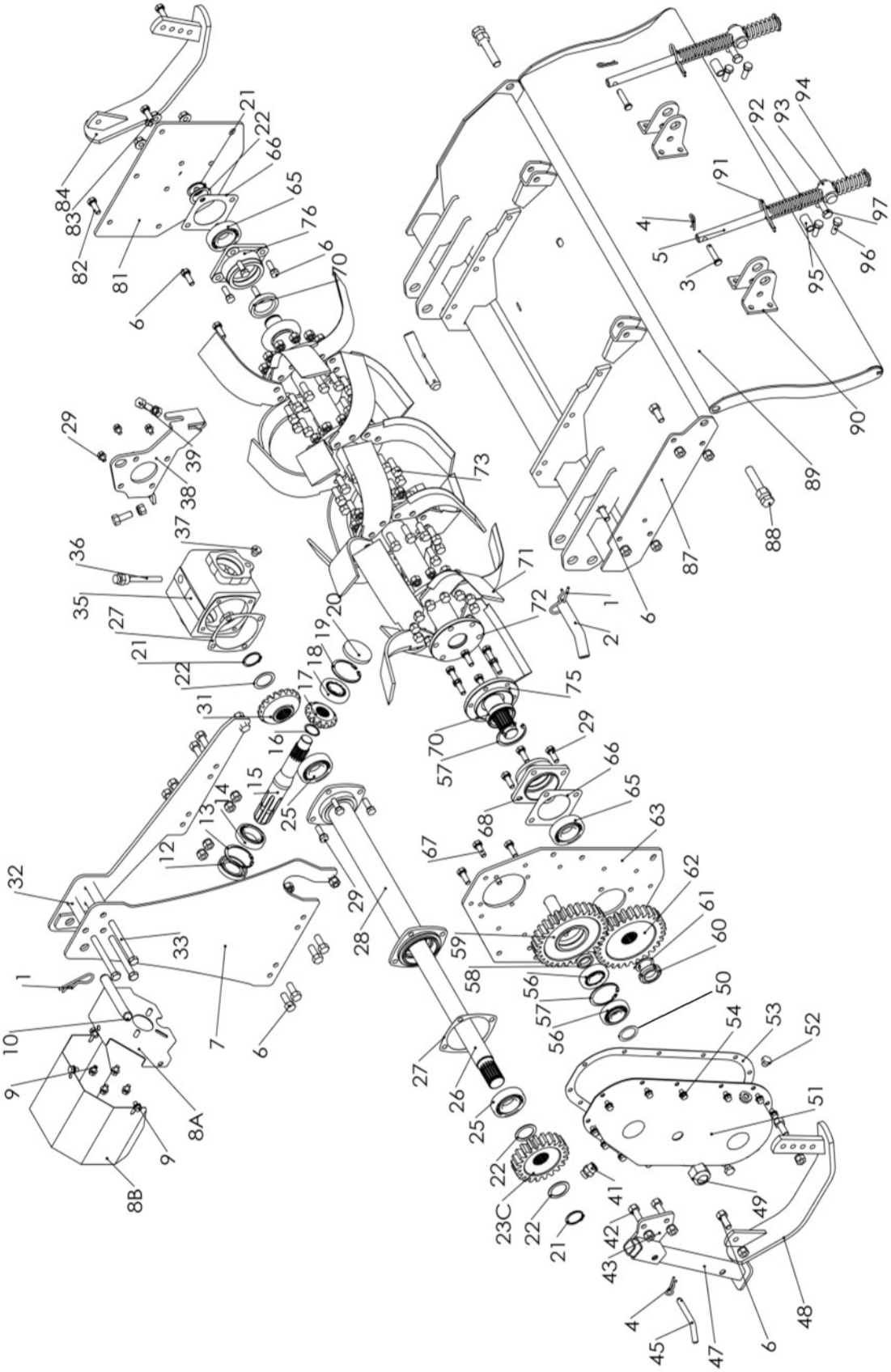

TXG Series Rotary Tiller - Version 2

Item	Part #	Description	Qty.
81	TX0201	Side Panel - Right	1
82	BM101525	Bolt– M10 x 1.5 x 25	3
83	GN061S	Grease Nipple– Straight M6 x 1.0	1
84	TX0602	Skid Weldment - Right	1
87	TX5602	Frame Weldment TXG-060 version 2	1
87	TX4802	Frame Weldment TXG-050 version 2	1
87	TX4002	Frame Weldment TXG-040 version 2	1
88	BM162090	Bolt- M16 x 2.0 x 90	2
89	TX5607	Tailgate TXG-040	1
89	TX4807	Tailgate TXG-050	1
89	TX4007	Tailgate TXG-060	1
90	TX0704		1
91	RC6	R clip M6	2
92	YT10660705	Upper spring - tailgate	2
93	YT10660704	Guide tailgate rod	2
94	YT10660706	Lower spring - tailgate	2
95	YT10660708	Tailgate bracket spacer	2
96	BM1217530	Bolt HH M12-1.75x30	8
97	BM1217560	Bolt HH M12-1.75x60	2

NOTE: TXG Series Rotary Tiller - Version 2 begins with the following serial numbers.

TXG-040 42001
TXG-050 52001
TXG-060 62001

PTO TXG

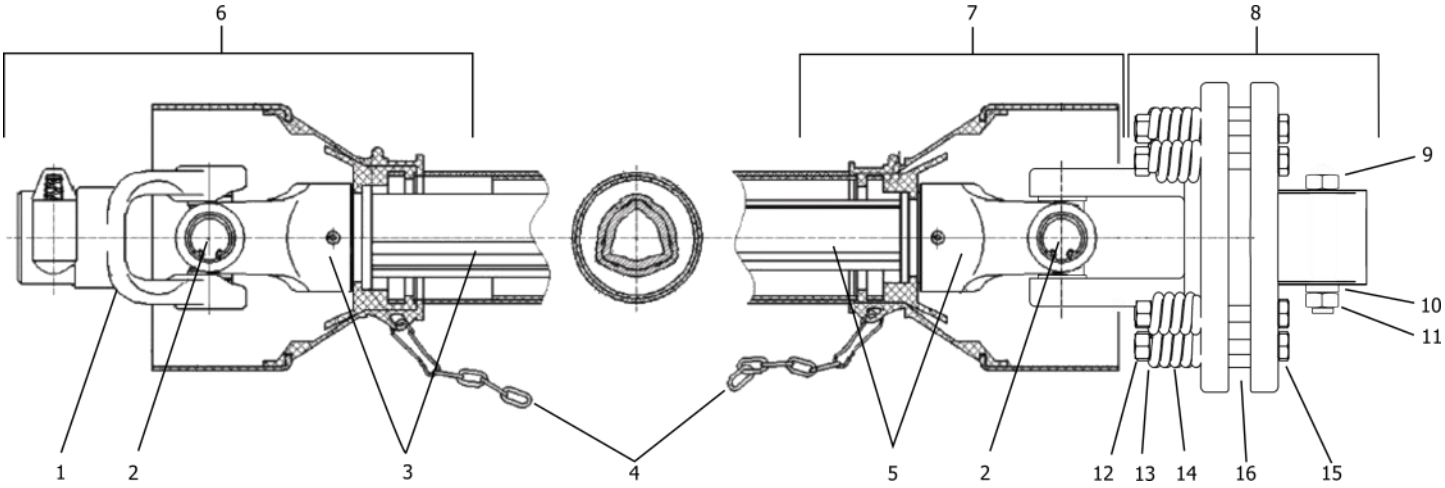

Item	Part #	Description	Qty.
1	DP1075-40	PTO Yoke - Series 40	1
2	DP1076-40	Cross and Bearings - Series 40	2
3	DP1079-40	Female Yoke and Tube (tractor end) - Series 40	1
4	5SB3007	Safety chain	2
5	DP1078-40	Male Yoke and Tube (implement end) - Series 40	1
6	DP1074F-40	Complete Female End PTO Shielding (tractor end)	1
7	DP1074M-40	Complete Male End PTO Shielding (implement end)	1
8	DP1098-30	Slip clutch complete 150mm clutch	1
9	BM1217565	Bolt HH M12-1.75x65 (8.8)	1
10	LNM12175	Nut lock M12-1.75	1
11	FW12	Washer flat M12	1
12	LNM1015	Nut lock M10-1.50	8
13	FW10	Washer flat M10	8
14	1215012-30	Spring - slip clutch	8
15	BM101585	Bolt HH 10-1.50x85 (8.8)	8
16	180-510-30	Friction disc - 4-3/4” OD	2
-	147120-H-IE	1/2 PTO Series 40 - Implement end (with slip clutch & shielding)	1
-	147120-H-TE	1/2 PTO Series 40 - Tractor end (with shielding)	1
-	147120	Complete PTO - Series 40 - 150mm Slip Clutch	1

Slip clutch complete 150mm -TXG

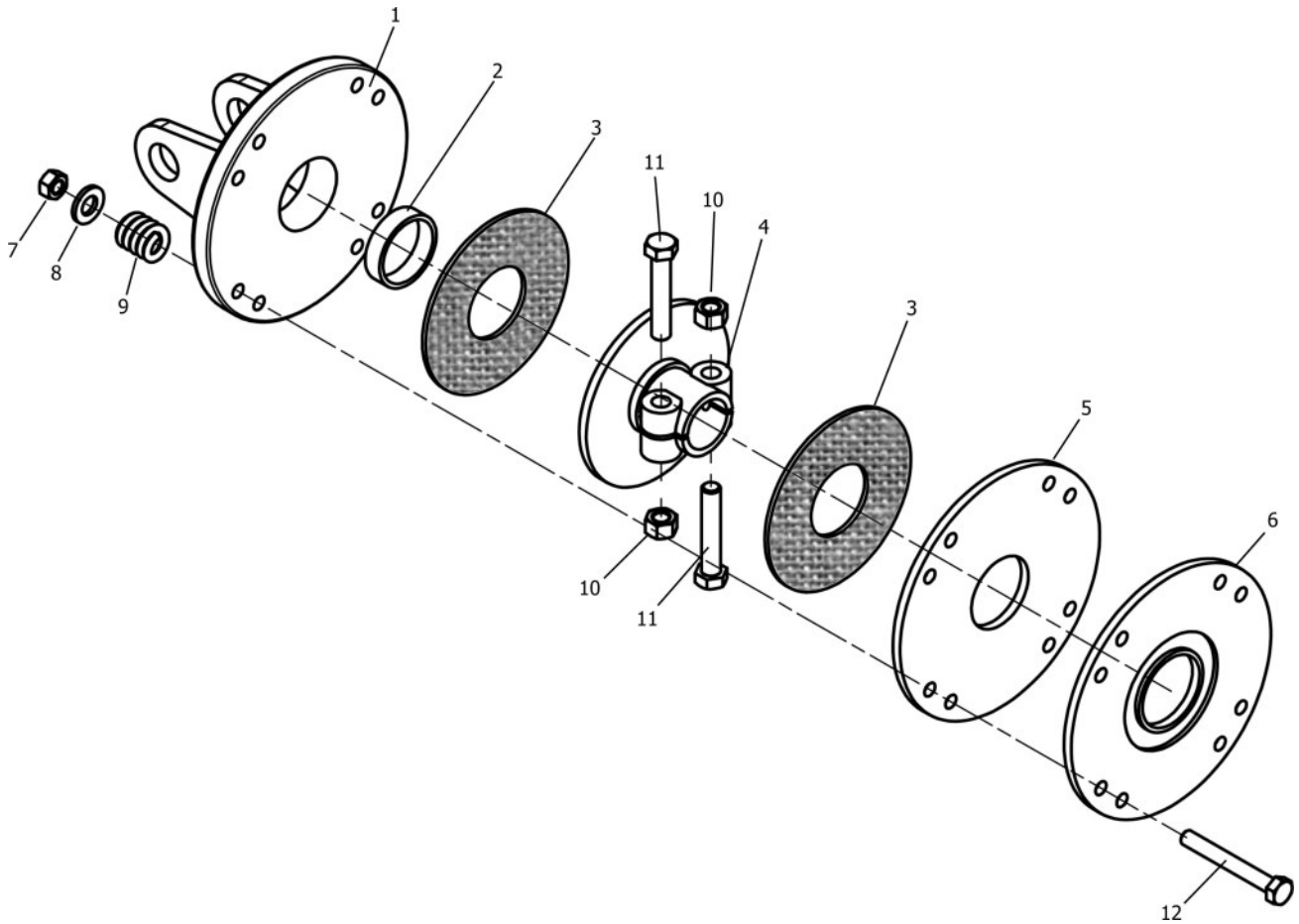

Item	Part #	Description	Qty.
1	DP1097-30	Slip clutch flange yoke	1
2	DP1083-150	Nylon slip clutch ring	1
3	180-510-30	Friction disc	2
4	DP1085-30	Center female spline friction plate	1
5	DP1090-30	Friction plate	1
6	DP1091-30	Back plate	1
7	LNM1015	Nut self-locking M10-1.50	6
8	FW10	Washer flat M10	6
9	1215012-30	Clutch spring	6
10	LNM12175	Nut lock M12-1.75	2
11	BM1217565	Bolt HH M12-1.75x65 (8.8)	2
12	BM101585	Bolt HH M10-1.5x85 (8.8)	6
-	DP1098-30	Slip clutch complete 150mm clutch	1

YCT Series Rotary Tiller - Version 1

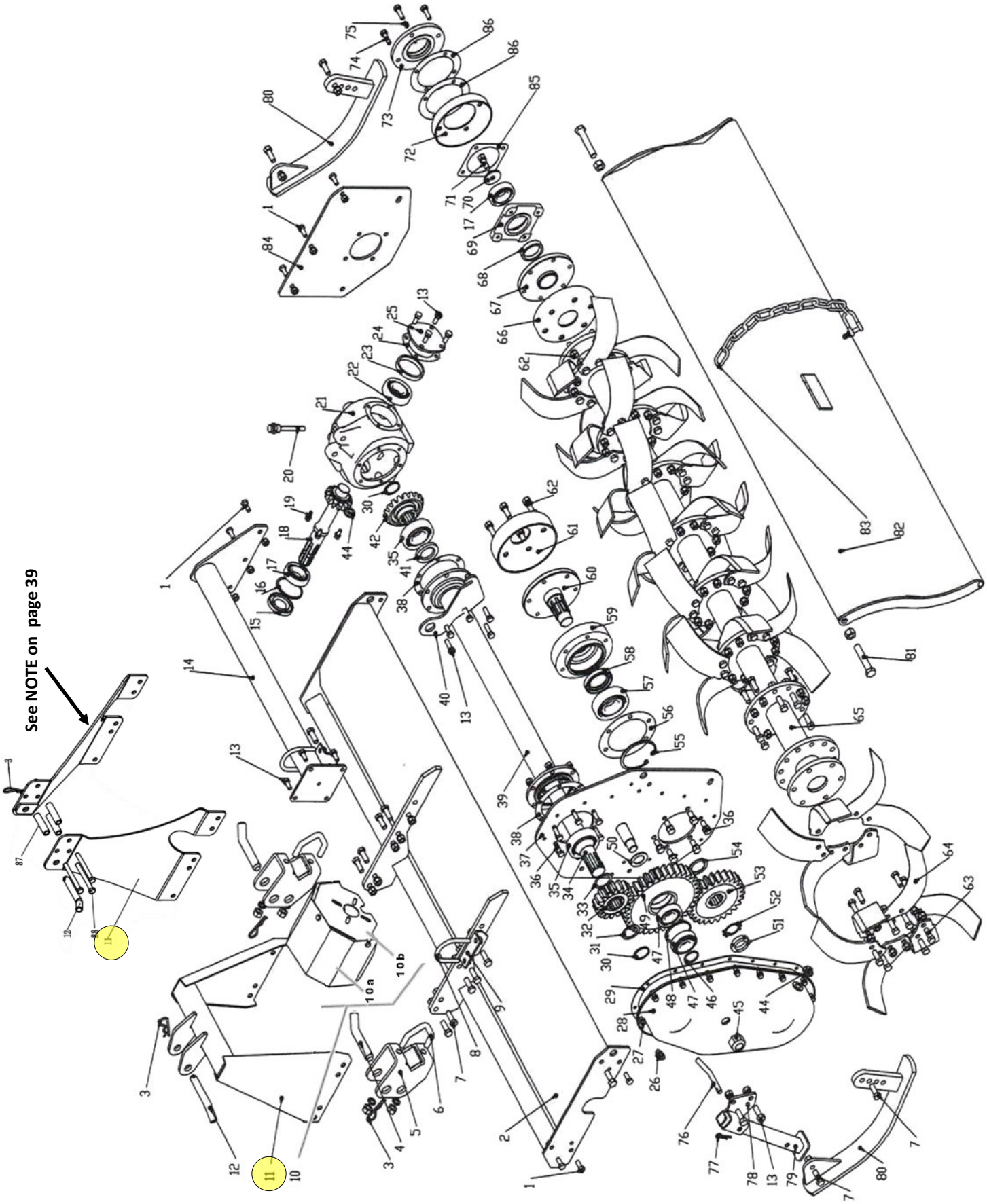

YCT Series Rotary Tiller - Version 1

Item	Part #	Description	Qty.
1	BM101525	Bolt– M10 x 1.5 x 25	16
2	YT1058010100	YCT-060 Main Frame	1
	YT1066010100	YCT-066 Main Frame	1
	YT1074010100	YCT-074 Main Frame	1
	YT1082010100	YCT-082 Main Frame	1
3	RC4	"R" Clip– M4	3
4	YT1066010204	Hitch Pin	2
5	YT106601020100	Lower Hitch Bracket	2
	YT108201020100	Lower Hitch Bracket - YCT-082	2
6	YT1066010201	V Bolt, Hitch	2
	LW14	Lock Washer- M14	4
	NM1420	Nut- M14 x 2.0	4
	YT1082010201	U Bolt, Hitch - YCT-082	2
7	BM1217535	Bolt- M12 x 1.75 x 35	24
	NM12175	Nut M12-1.75	24
8	LW12	Washer lock	24
	YT10660301	M12U Bolt- Drive tube	1
9	YT10660302	Support - Drive tube	1
10	YT0304	PTO Shield - Complete	1
10a	YT0305	PTO Shield - Cover	1
10b	YT0306	PTO Shield - Backing plate	1
11	YT106601030100	A Frame (old style)	1
	YT106601030100AL	A Frame Version 2 YCT LH (new style)	1
	YT106601030100AR	A Frame Version 2 YCT RH (new style)	1
12	YT1066010202	Top Hitch Pin	1
13	BM101525	Bolt- M10 x 1.5 x 25	4
14	YT10500400	Gearbox Support Tube YCT-050	1
	YT10580400	Gearbox Support Tube YCT-060	1
	YT10660400	Gearbox Support Tube YCT-066	1
	YT10740400	Gearbox Support Tube YCT-074	1
	YT10820400	Gearbox Support Tube YCT-082	1
15	OS357210	Oil Seal– M35 x 72 x 10	1
16	SRI-72	Snap Ring - Internal M72	1
17	B6207	Bearing 6207	2
18	YT10660205	Bevel Pinion Gear Shaft Z=13	1
	YT10660205R	Bevel Pinion Gear Shaft - Reverse Series	1
19	BM0812516	Bolt- M8 x 1.25 x 16	3
20	YT1066030300	Gearbox Oil Plug	1
21	YT10660201	Gearbox Housing	1

YCT Series Rotary Tiller - Version 1

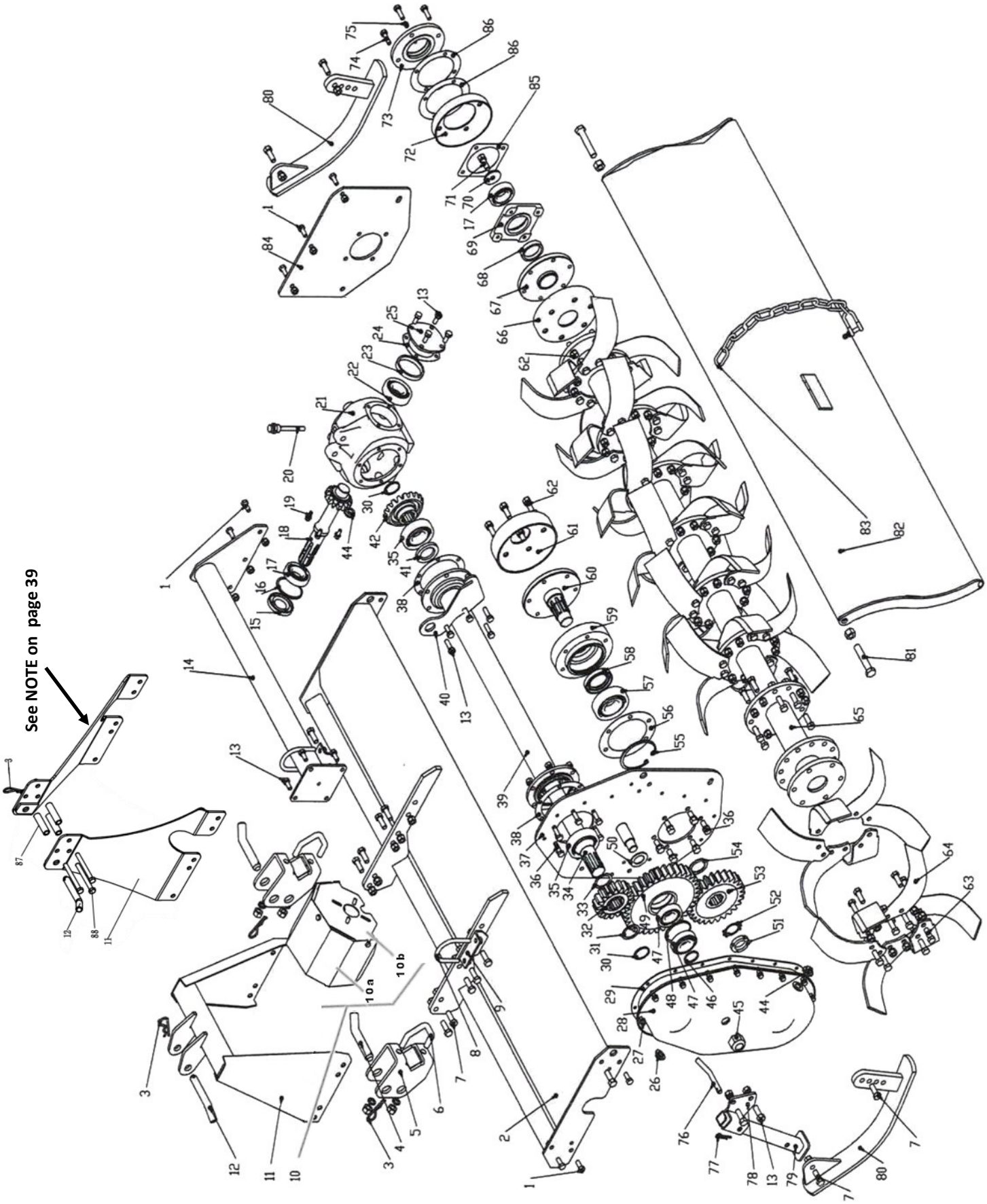

YCT Series Rotary Tiller - Version 1

Item	Part #	Description	Qty.
22	B6307	Bearing 6307	1
23	YT10660204	Spacer	1
24	YT10660203	Gasket Bearing Cover	1
25	YT10660202	Bearing Cover	1
26	OP1615V	Drain Plug- M16 x 1.5 Vented	1
27	BM0812525	Bolt– M8 x 1.25 x 25	15
	NM08125	Nut- M8 x 1.25	15
	LW08	Lock Washer- M8	15
28	YT1066080100	Side Gear Cover	1
29	YT10660801	Gasket - Side Gear Cover	1
30	SRE-40	Snap Ring- External M40	2
31	YT10660103	Shim– M52 x 40 x 1	-
32	YT10660209	Gear Drive 17-T	1
33	YT10660208	Shim– M52 x 40 x 1	1
34	YT10580210	Drive Shaft YCT-060	1
	YT10660210	Drive Shaft YCT-066	1
	YT10740210	Drive Shaft YCT-074	1
	YT10820210	Drive Shaft YCT-082	1
35	B63082RS	Bearing- 6308 2RS	1
36	BM101530	Bolt- M10 x 1.5 x 30	12
37	YT1066010400	Side Board - Left	1
38	YT10660207	Gasket Driveshaft– M151 x 115 x .05	2
39	YT1058020100	Driveshaft Tube Housing YCT-060	1
	YT1066020100	Driveshaft Tube Housing YCT-066	1
	YT1074020100	Driveshaft Tube Housing YCT-074	1
	YT1082020100	Driveshaft Tube Housing YCT-082	1
40	YT10660211	Lifting Hook	1
41	OS406508	Oil Seal- M40 x 65 x 8	1
42	YT10660206	Output Gear	1
44	OP1615	Drain Plug- M16 x 1.5	2
45	LNM2415	Lock Nut- M24 x 1.5	1
46	OR25x3	O - Ring– M25 x 3	1
47	B30306	Bearing 30306	2
48	SRI-72	Snap Ring- Internal M72	1
49	YT10660802	Middle Gear - Side Drive	1
50	YT10660803	Idle Gear Spacer 50 x 30.2 x 2	1

YCT Series Rotary Tiller - Version 1

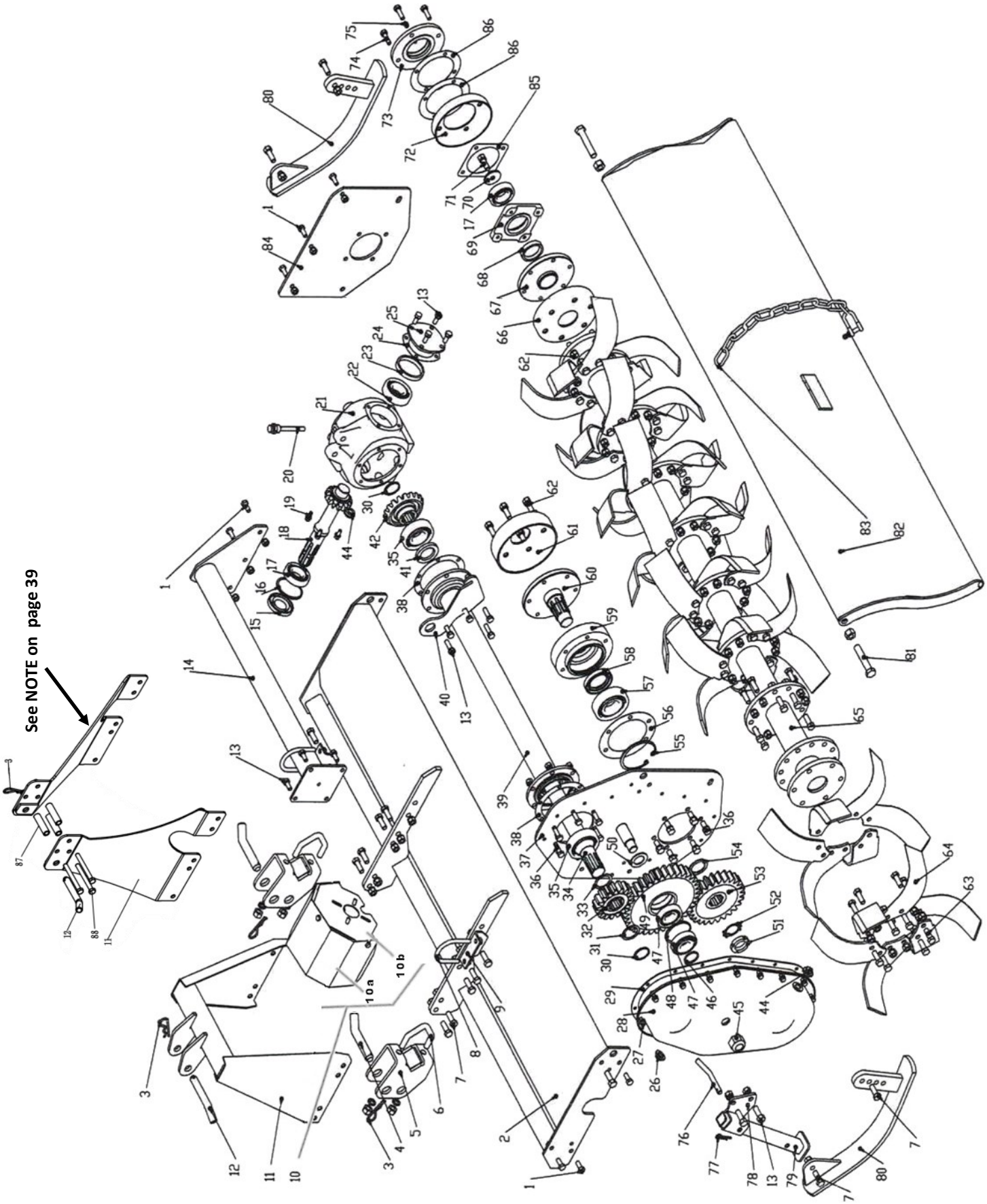

YCT Series Rotary Tiller - Version 1

Item	Part #	Description	Qty.
51	SNM3515	Nut- M35 x 1.5	1
52	SLW35	Special Lock Washer - M35	1
53	YT10660804	Gear - Rotor	1
54	YT10660806	Shim– M55 x 40 x 2	1
55	SRI-100	Snap Ring - Internal M100	1
56	YT10660808	Gasket - Drive Rotor M168 x 115 x .05	1
57	B6309000	Bearing 6309	1
58	OS508012	Oil Seal– M50 x 80 x 12	1
59	YT10660805	Rotor Support - Side Drive	1
60	YT10660807	Rotor Shaft Support	1
61	YT10660809	Dust shielding	1
62	BM1217530	Bolt - M12 x 1.75 x 30	6
63	BM1212535	Bolt - M12 x 1.25 x 35	84, 96, 108 120
	SFNM12125	Nut self locking Stover w/Flange M12-1.25	84, 96, 108 120
	LW12	Lock Washer - M12	84, 96, 108 120
64	YT1066090101	Tiller Tine - Right	21, 24, 27,30
	YT1066090102	Tiller Tine - Left	21, 24, 27,30
65	YT106009010100	Rotor Shaft - YCT-060	1
	YT106609010100	Rotor Shaft - YCT-066	1
	YT107409010100	Rotor Shaft - YCT-074	1
	YT108209010100	Rotor Shaft - YCT-082	1
66	YT10660901	Cover	1
67	YT10660903	Rotor Shaft Head - Right	1
68	OS456212	Oil Seal– M45 x 62 x 12	1
69	YT10660904	Bearing Housing	1
70	YT10660908	Retaining Washer	1
71	BM1217525	Bolt- M12 x 1.75 x 20	1
72	YT10660902	Inner Cover - Rotor Shaft	1
73	YT10660907	End Cap	1
74	BM101535	Bolt- M10 x 1.5 x 35	8
75	GN1015S	Grease Nipple Straight– M10 x 1.5	1

YCT Series Rotary Tiller - Version 1

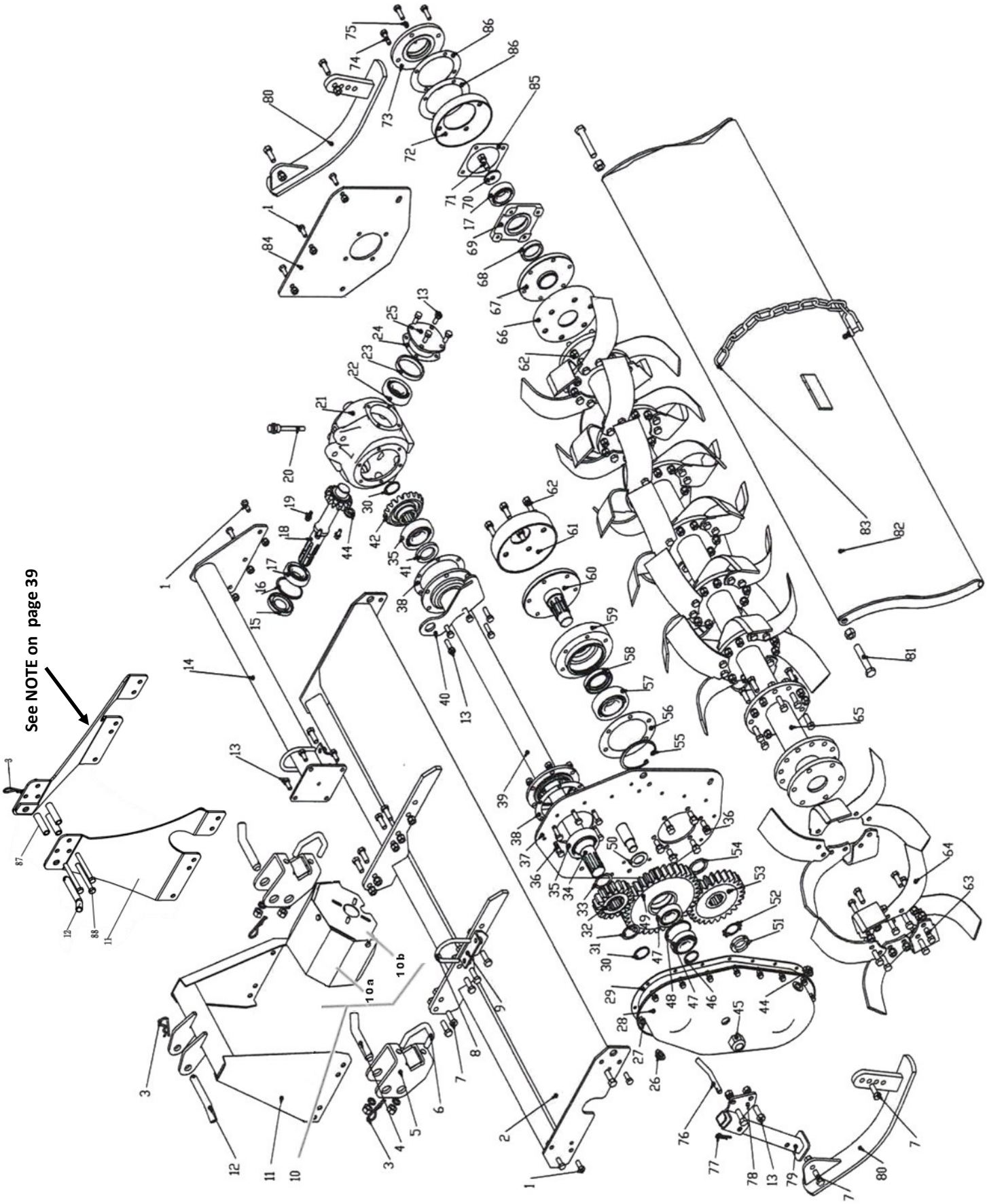

YCT Series Rotary Tiller - Version 1

Item	Part #	Description	Qty.
76	YT10660501	Pin - Stand	1
77	RC3	R-Clip- M3	1
78	YT1066050200	Stand Bracket	1
79	YT1066050100	Stand Leg	1
80	YT10660600L	Skid Weldment - Left	1
	YT10660600R	Skid Weldment - Right	1
81	BM162090FT	Bolt HH M16-2.0x90 full thread	2
82	YT1060070100	Tailgate YCT-060	1
	YT1066070100	Tailgate YCT-066	1
	YT1074070100	Tailgate YCT-074	1
	YT1082070100	Tailgate YCT-082	1
83	YT1066070200	Chain - Drag Board	1
84	YT10660101	Side Plate - Right	1
85	YT10660906	Gasket– M119 x 95 x 0.5	1
86	YT10660905	Gasket- M150 x 108 x .05	2
	YTGBC1001	Gearbox Complete	1
87	YT01030103	A frame spacer	3
88	BM12175110	Bolt HH M12-1.75x110	3

NOTE: Beginning with the following serial numbers, these models will come standard the new YT106601030100A, A frame version 2:

YCT-060 230001
YCT-066 240001
YCT-074 250001
YCT-082 260001

YCT Series Rotary Tiller - Version 2

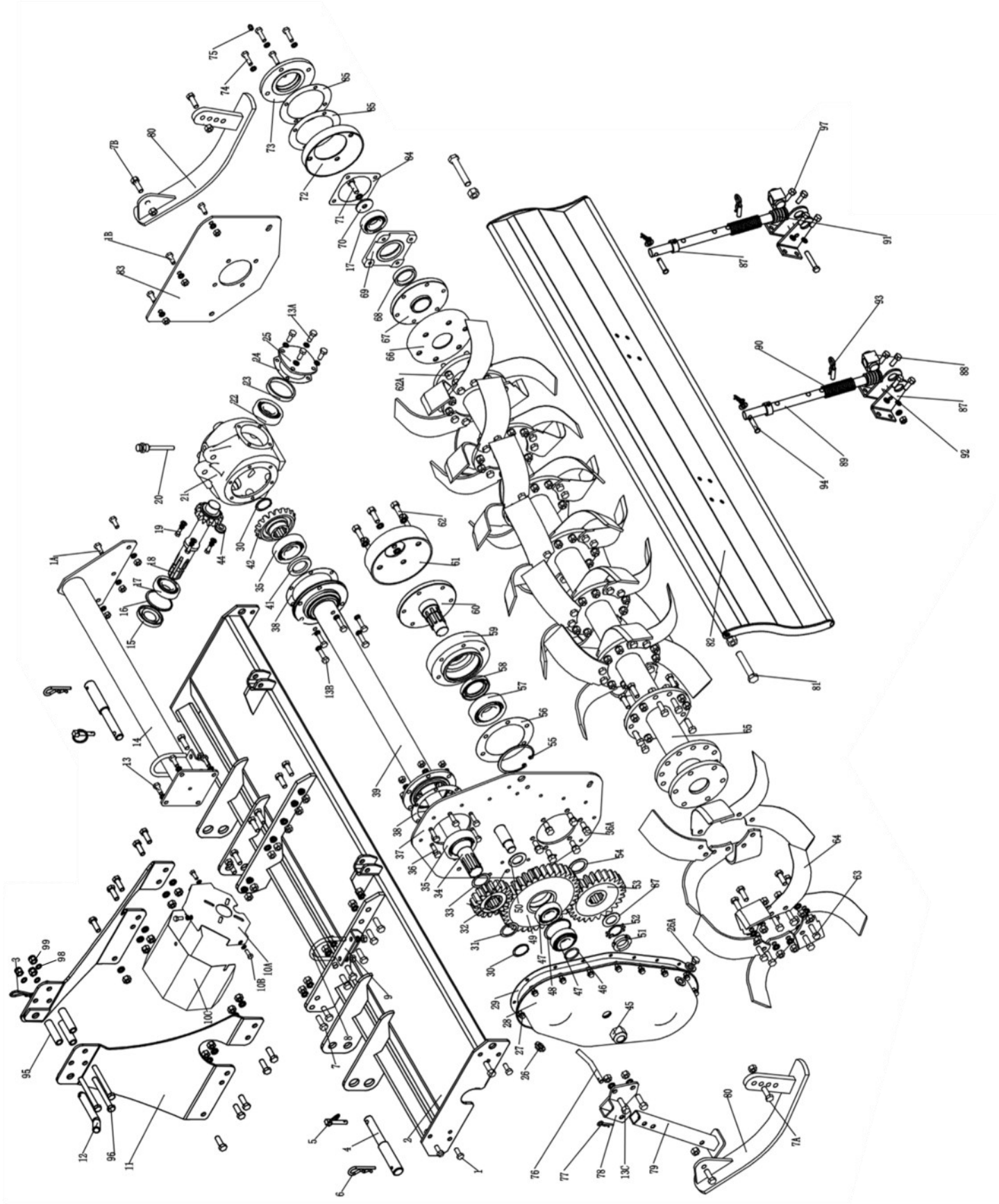

YCT Series Rotary Tiller - Version 2

1	BM101525	Bolt– M10 x 1.5 x 25	4
1A	BM101525	Bolt– M10 x 1.5 x 25	3
1B	BM101525	Bolt– M10 x 1.5 x 25	3
2	YT1058010100A	YCT-060 Main Frame	1
	YT1066010100A	YCT-066 Main Frame	1
	YT1074010100A	YCT-074 Main Frame	1
	YT1081010100A	YCT-082 Main Frame	1
3	RC4	"R" Clip– M4	3
4	YT1082055	Lower hitch pin Cat. 1&2 (for 82" only)	2
	BV0205	Lower hitch pin Cat. 1 (all other sizes)	2
5	LYNPN10	Lynch pin 10	2
6	RC4	R-clip 04	2
7	BM1217535	Bolt HH M12-1.75x35	12
7A	BM1217535	Bolt HH M12-1.75x35	2
7B	BM1217530	Bolt HH M12-1.75x30	2
8	YT10660301	M12 U bolt drive tube	1
9	YT10660302	Support - Drive tube	1
10	YT0304	PTO Shield - Complete	1
10A	YT0306	PTO Shield - Backing plate	1
10C	YT0305	PTO Shield - Cover	1
11	YT106601030100AL	A Frame Version 2 YCT LH (new style)	1
	YT106601030100AR	A Frame Version 2 YCT RH (new style)	1
12	YT1066010202	Top Hitch Pin	1
13	BM101520	Bolt- M10 x 1.5 x 20	4
13A	BM101525	Bolt- M10 x 1.5 x 25	4
13B	BM101525	Bolt- M10 x 1.5 x 25	4
13C	BM101525	Bolt- M10 x 1.5 x 25	2
14	YT10500400	Gearbox Support Tube YCT-050	1
	YT10580400	Gearbox Support Tube YCT-060	1
	YT10660400	Gearbox Support Tube YCT-066	1
	YT10740400	Gearbox Support Tube YCT-074	1
	YT10810400	Gearbox Support Tube YCT-082	1
15	OS357210	Oil Seal– M35 x 72 x 10	1
16	SRI-72	Snap Ring - Internal M72	1
17	B6207	Bearing 6207	2
18	YT10660205	Bevel Pinion Gear Shaft Z=13	1
	YT10660205R	Bevel Pinion Gear Shaft - Reverse Series	1
19	BM0812516	Bolt- M8 x 1.25 x 16	3
20	YT1066030300	Gearbox Oil Plug	1
21	YT10660201	Gearbox Housing	1

YCT Series Rotary Tiller - Version 2

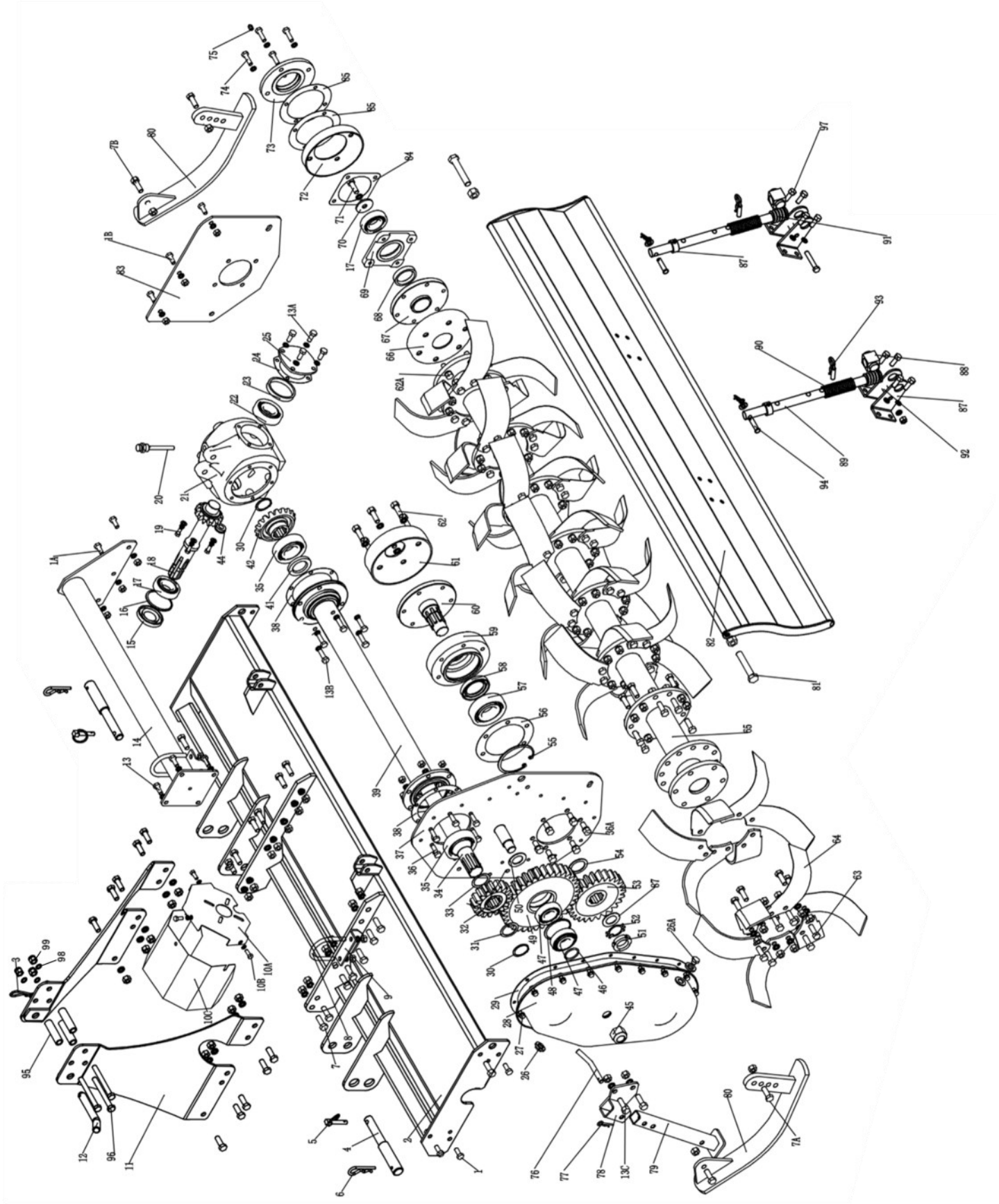

YCT Series Rotary Tiller - Version 2

22	B6307	Bearing 6307	1
23	YT10660204	Spacer	1
24	YT10660203	Gasket Bearing Cover	1
25	YT10660202	Bearing Cover	1
26	OP1615V	Drain Plug- M16 x 1.5 Vented	1
27	BM0812525	Bolt– M8 x 1.25 x 25	15
	NM08125	Nut- M8 x 1.25	15
	LW08	Lock Washer- M8	15
28	YT1066080100	Side Gear Cover	1
29	YT10660801	Gasket - Side Gear Cover	1
30	SRE-40	Snap Ring- External M40	1
31	YT10660103	Shim– M52 x 40 x 1	-
32	YT10660209	Gear Drive 17-T	1
33	YT10660208	Shim– M52 x 40 x 1	1
34	YT10580210	Drive Shaft YCT-060	1
	YT10660210	Drive Shaft YCT-066	1
	YT10740210	Drive Shaft YCT-074	1
	YT10810210	Drive Shaft YCT-082	1
35	B63082RS	Bearing- 6308 2RS	1
36	BM101530	Bolt- M10 x 1.5 x 30	12
37	YT1066010400	Side Board - Left	1
38	YT10660207	Gasket Driveshaft– M151 x 115 x .05	2
39	YT10580210	Driveshaft Tube Housing YCT-060	1
	YT10660210	Driveshaft Tube Housing YCT-066	1
	YT10740210	Driveshaft Tube Housing YCT-074	1
	YT10820210	Driveshaft Tube Housing YCT-082	1
40	OS406508	Oil Seal- M40 x 65 x 8	1
41	YT10660206	Output Gear	1
42	OP1615	Drain Plug- M16 x 1.5	2
44	LNM2415	Lock Nut- M24 x 1.5	1
45	OR25x3	O - Ring– M25 x 3	1
46	B30306	Bearing 30306	2
47	SRI-72	Snap Ring- Internal M72	1
48	YT10660802	Middle Gear - Side Drive	1
49	YT10660803	Idle Gear Spacer 50 x 30.2 x 2	1
50	SNM3515	Nut- M35 x 1.5	1

YCT Series Rotary Tiller - Version 2

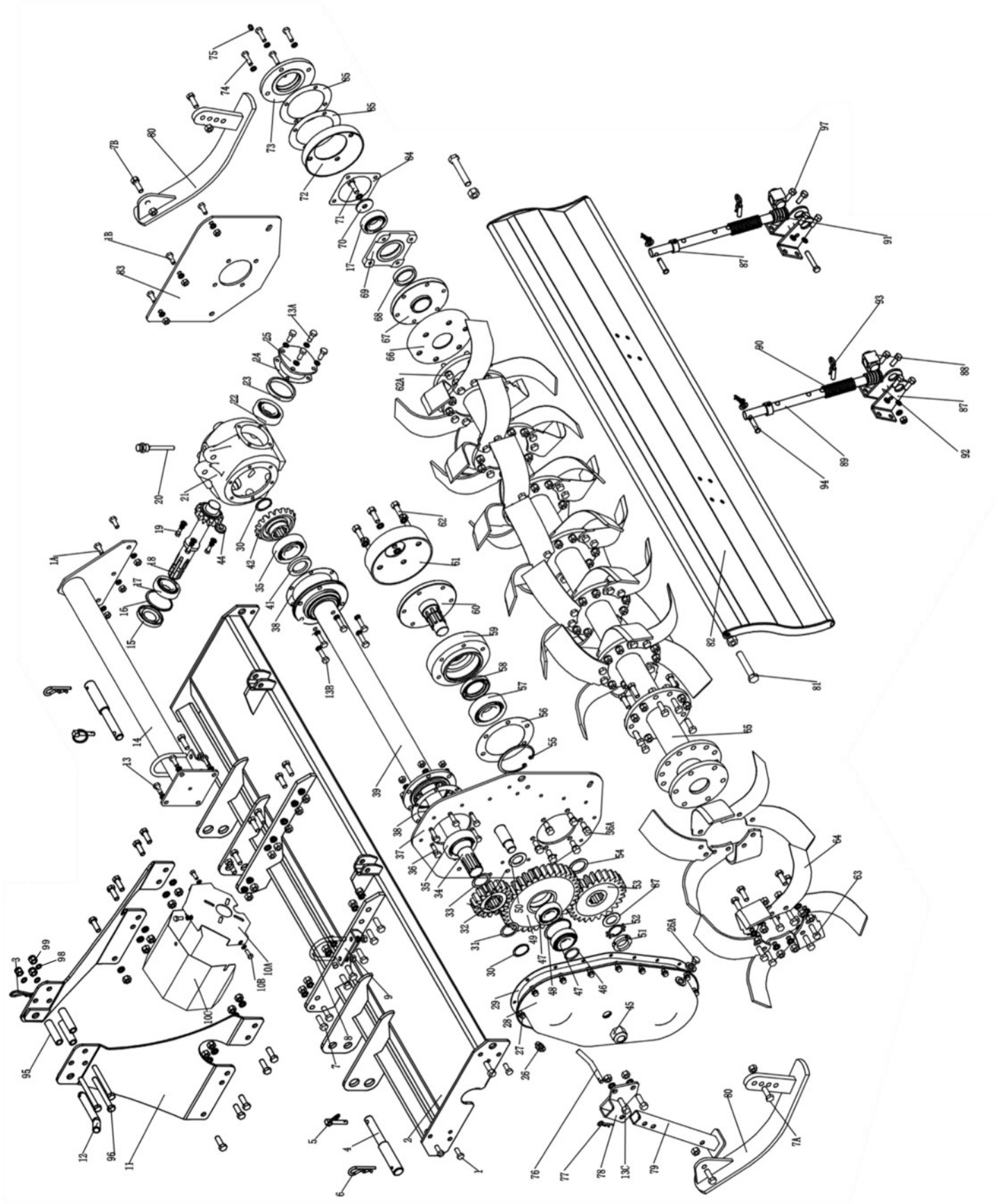

YCT Series Rotary Tiller - Version 2

51	SNM3515	Nut- M35 x 1.5	1
52	SLW35	Special Lock Washer - M35	1
53	YT10660804	Gear - Rotor	1
54	YT10660806	Shim– M55 x 40 x 2	1
55	SRI-100	Snap Ring - Internal M100	1
56	YT10660808	Gasket - Drive Rotor M168 x 115 x .05	1
57	B6309000	Bearing 6309	1
58	OS508012	Oil Seal– M50 x 80 x 12	1
59	YT10660805	Rotor Support - Side Drive	1
60	YT10660807	Rotor Shaft Support	1
61	YT10660809	Dust shielding	1
62	BM1217535	Bolt - M12 x 1.75 x 35	6
62A	BM1217530	Bolt - M12 x 1.25 x 30	6
63	BM1212535	Bolt - M12 x 1.25 x 35	96
	SFNM12125	Nut self locking Stover w/Flange M12-1.25	96
	LW12	Lock Washer - M12	96
64	YT1066090101	Tiller Tine - Right	-
	YT1066090102	Tiller Tine - Left	-
65	YT106009010100	Rotor Shaft - YCT-060	1
	YT106609010100	Rotor Shaft - YCT-066	1
	YT107409010100	Rotor Shaft - YCT-074	1
	YT108109010100	Rotor Shaft - YCT-082	1
66	YT10660901	Cover	1
67	YT10660903	Rotor Shaft Head - Right	1
68	OS456212	Oil Seal– M45 x 62 x 12	1
69	YT10660904	Bearing Housing	1
70	YT10660908	Retaining Washer	1
71	BM1217525	Bolt- M12 x 1.75 x 20	1
72	YT10660902	Inner Cover - Rotor Shaft	1
73	YT10660907	End Cap	1
74	BM101535	Bolt- M10 x 1.5 x 35	8
75	GN1015S	Grease Nipple Straight– M10 x 1.5	1

YCT Series Rotary Tiller - Version 2

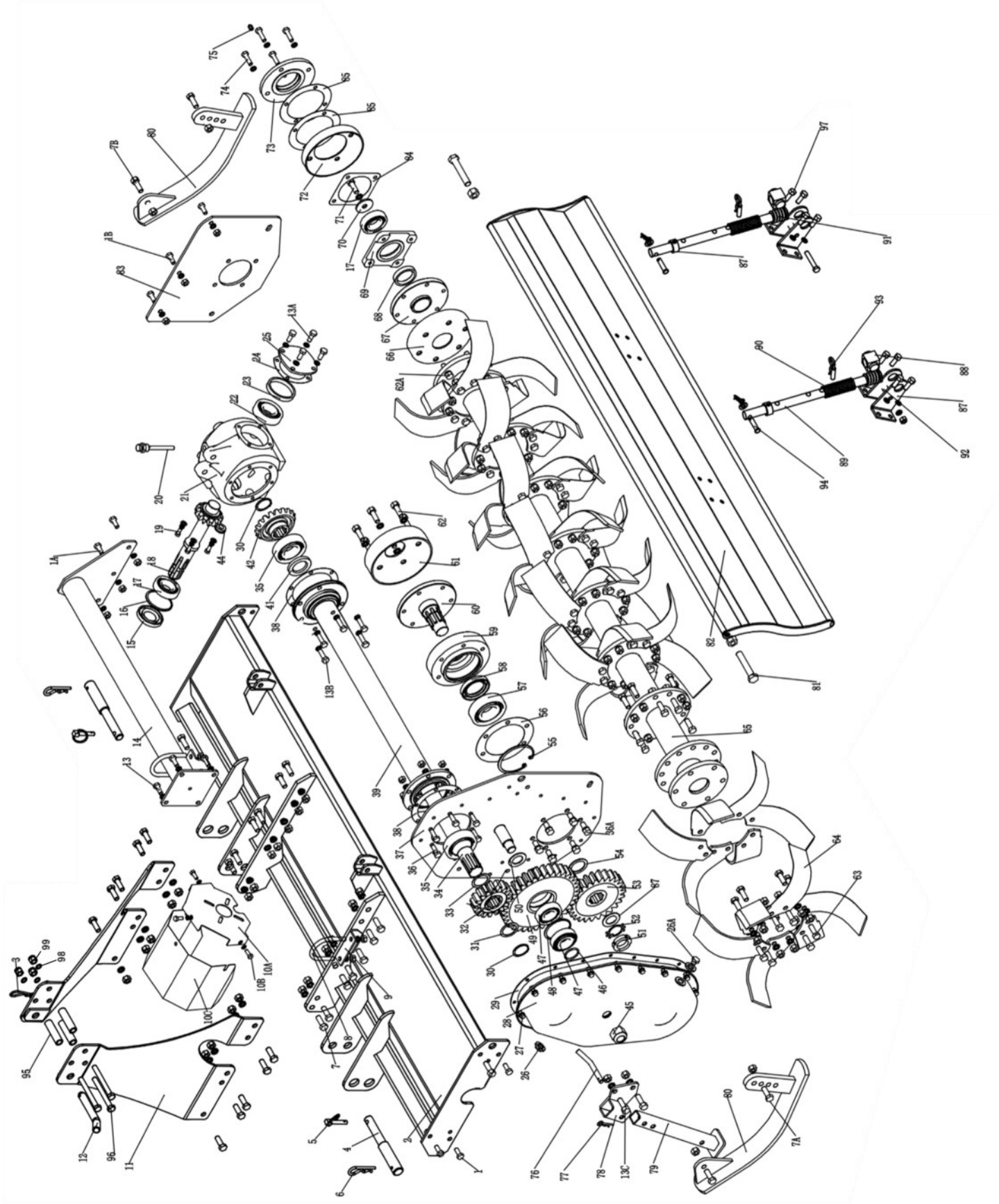

YCT Series Rotary Tiller - Version 2

76	YT10660501	Pin - stand	1
77	RC3	R-clip-M3	1
78	YT1066050200	Stand bracket	1
79	YT1066050100	Stand Leg	1
80	YT10660600L	Skid Weldment - Left	1
	YT10660600R	Skid Weldment - Right	1
81	BM162090	Bolt- M16 x 2.0 x 90	2
82	YT1060070100A	Tailgate YCT-050	1
	YT1066070100A	Tailgate YCT-058	1
	YT1074070100A	Tailgate YCT-066	1
	YT1082070100A	Tailgate YCT-074	1
	YT1082070100A	Tailgate YCT-082	1
83	YT10660101	Side Plate - Right	1
84	YT10660906	Gasket- M118 x 95 x .05	1
85	YT10660905	Gasket- M150 x 108 x .05	1
87	YT10660703	Bracket - tailgate spring	4
88	YT10660704	Guide tailgate rod	2
89	YT1066070700	Rod - tailgate spring	2
90	YT10660705	Upper spring - tailgate	2
91	YT10660706	Lower spring - tailgate	2
92	YT10660708	Tailgate bracket spacer	2
93	RC5S	Specialty R-clip	2
94	CP1250	Clevis pin M12x50	2
95	YT01030103	A frame spacer	3
96	BM12175110	Bolt HH M12-1.75x110	3
97	BM1217530	Bolt HH M12-1.75x30	8
98	LW12	Washer lock M12	3
99	NM12175	Nut HH M12-1.75	3

NOTE 1: YCT Series Rotary Tiller - Version 2 begins with the following serial numbers.

YCT-060 235001
YCT-066 245001
YCT-074 255001
YCT-082 265001

NOTE 2: YCT-R (Reverse) Series Rotary Tiller - Version 2 begins with the following serial numbers.

YCT-R60 275001
YCT-R74 285001

YCT-R60, YCT-R74 Front Shielding

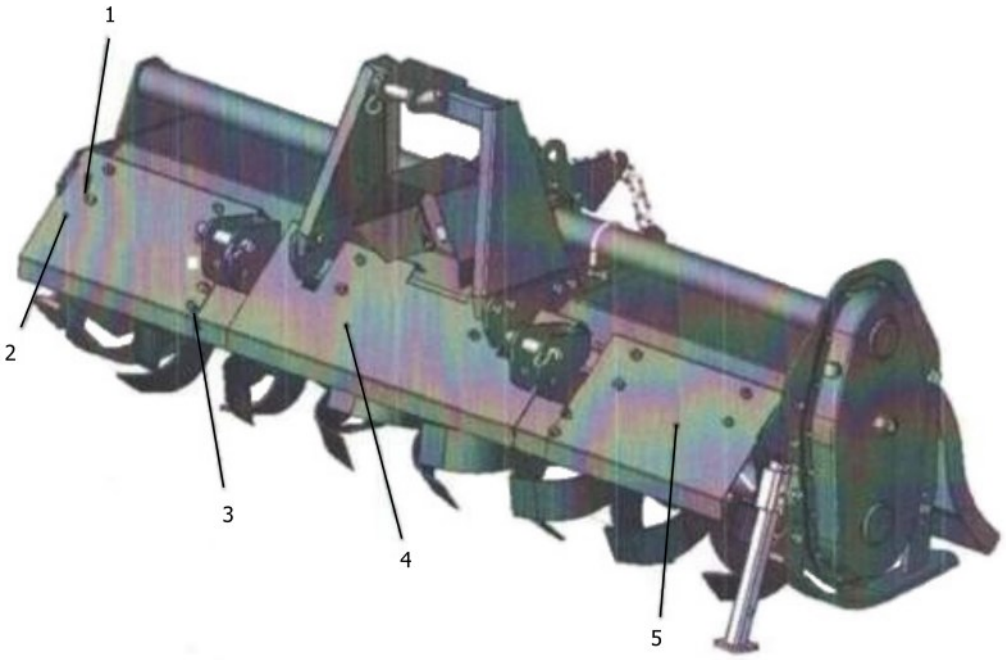

Item	Part #	Description	Qty.
1	YT10661075025	“U” Bolt M10 x 1.5 w/nuts	6
2	YT106075025R	Panel-60” Right	1
	YT107475025R	Panel-74” Right	1
3	BM101525	Bolt M10 x 25	4
	NM1015	Nut M10 x 1.5	4
	LW10	Lock Washer 10mm	4
4	YT106075025M	Panel-60” and 74”	1
5	YT106075025L	Panel-60” Left	1
	YT107475025L	Panel-74” Left	1
	YT106075025C	Panel-60” Complete	1
	YT107475025C	Panel-74” Complete	1

PTO Shaft YCT

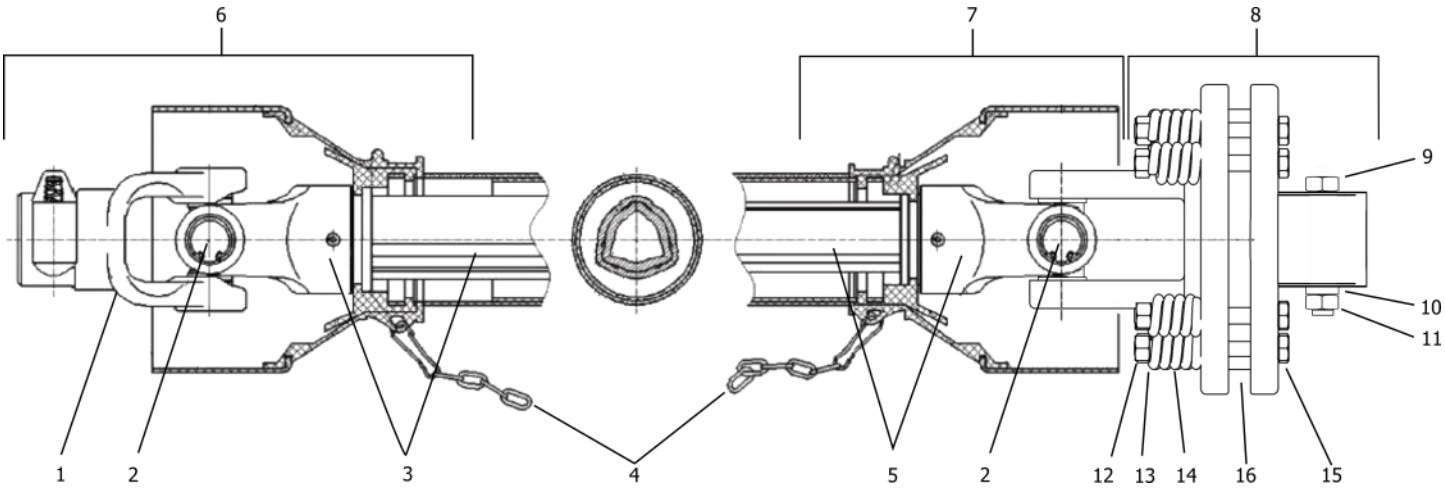

Item	Part #	Description	Qty.
1	DP1075-40	PTO Yoke - Series 40	1
2	DP1076-40	Cross and Bearings - Series 40	2
3	DP1079-40	Female Yoke and Tube (tractor end) - Series 40	1
4	5SB3007	Safety chain	2
5	DP1078-40	Male Yoke and Tube (implement end) - Series 40	1
6	DP1074F-40	Complete Female End PTO Shielding (tractor end)	1
7	DP1074M-40	Complete Male End PTO Shielding (implement end)	1
8	DP1098-40	Slip clutch complete 180mm clutch	1
9	BM1217570	Bolt HH M12-1.75x70 (8.8)	2
10	LNM12175	Nut lock M12-1.75	2
11	FW12	Washer flat M12	2
12	LNM1015	Nut lock M10-1.50	6
13	FW10	Washer flat M10	6
14	1215012-40	Spring - slip clutch	6
15	BM101590	Bolt HH 10-1.50x90 (8.8)	6
16	180-510-40	Friction disc - 5-1/2” OD	2
-	147122-H-IE	1/2 PTO Series 40 - Implement end (with slip clutch & shielding)	1
-	147122-H-TE	1/2 PTO Series 40 - Tractor end (with shielding)	1
-	147122	Complete PTO - Series 40 - 180mm Slip Clutch	1

Decals

1

2

3

4

5

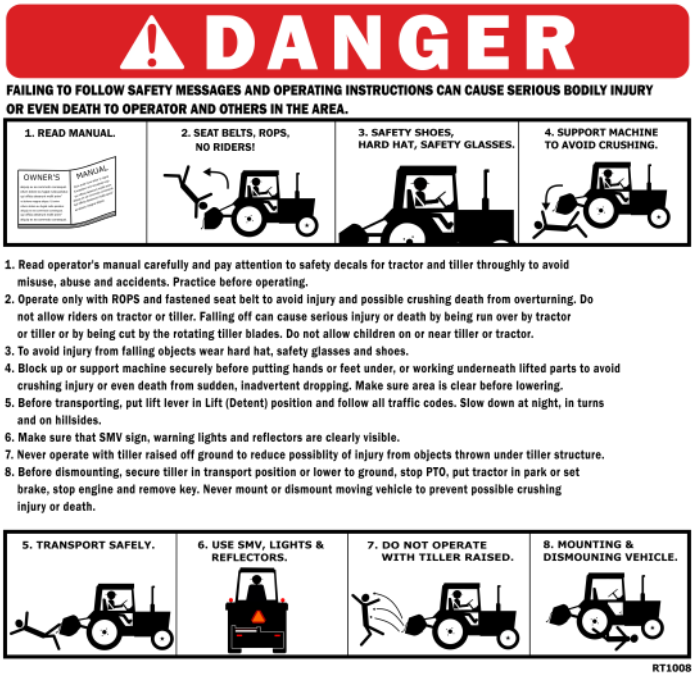

6

7

9

8

Decals

Item	Part #	Description	Qty.
1	RT1004E	Decal Warning “Serious Injury or Death”	1
2	D960	Decal Warning “Cancer & Reproductive Harm”	1
3	RT1005	Decal Warning “To Prevent Serious Injury”	1
4	RT1006	Decal Danger “Rotating Tines Hazard”	1
5	RT1007	Decal Danger “Rotating Driveline Hazard”	1
6	RT1008	Decal Danger “Failing to Follow Safety Messages”	1
7	D1015	Decal Logo “Tar River” Small	1
8	NA	Decal “Gear Drive”	1
9	NA	Decal Model # “TXG-XXX”	1
	NA	Decal Model # “YCT-XXX”	1

Warranty

LIMITED WARRANTY

Belco Resources Equipment warrants to the original purchaser of any new piece of machinery from Belco Resources Equipment, purchased from an authorized Belco Resources Equipment dealer, that the equipment be free from defects in material and workmanship for a period of one (1) year for non-commercial, state, and municipalities' use, ninety (90) days for commercial use from date of retail sale. Warranty for rental purposes is thirty (30) days. The obligation of Belco Resources Equipment to the purchaser under this warranty is limited to the repair or replacement of defective parts.

A four (4) extended Gearbox Limited Warranty is provided for TXG-YCT-RXT-CXT models at the end of the standard one (1) year warranty period. This warranty is not provided for commercial or rental uses. The extended warranty provides for the replacement of parts only. Not covered are oil seals or any damages to the gearbox due to lack of lubrications.

Replacement or repair parts installed in the equipment covered by this limited warranty are warranted for ninety (90) days from the date of purchase of such part or to the expiration of the applicable new equipment warranty period, whichever occurs later. Warranted parts shall be provided at no cost to the user at an authorized Belco Resources Equipment dealer during regular working hours. Belco Resources Equipment reserves the right to inspect any equipment or parts, which are claimed to have been defective in material or workmanship.

This limited warranty does not apply to and excludes wear items such as shear pins, tires, tubes knives, blades or other wear items. Oil or grease is not covered by this warranty.

All obligations of Belco Resources Equipment under this limited warranty shall be terminated if:

- Proper service is not performed on the machine.
- The machine is modified or altered in any way.
- The machine is being used or has been used for purposes other than those for which the machine was intended.

DISCLAIMER OF IMPLIED WARRANTIES & CONSEQUENTIAL DAMAGES

Belco Resources Equipment obligation under this limited warranty, to the extent allowed by law, is in lieu of all warranties, implied or expressed, including implied warranties of merchantability and fitness for a particular purpose and any liability for incidental and consequential damages with respect to the sale or use of the items warranted. Such incidental and consequential damages shall include but not be limited to: transportation charges other than normal freight charges; cost of installation other than cost approved by Belco Resources Equipment; duty; taxes; charges for normal service or adjustment; loss of crops or any other loss of income; rental of substitute equipment, expenses due to loss, damage, detention or delay in the delivery.

REGISTRATION

The online Warranty Registration must be completed in order to qualify for coverage on this Limited Warranty. Visit br-equipment.com, click on "Warranty Registration" and completely fill out the form to register the new piece of equipment.

Page left blank intentionally

401 Jeffreys Road
Rocky Mount, NC 27804
www.tarrivermfg.com

Tel: 252-822-7140
Fax: 252-787-5855
Sales@tarrivermfg.com